COPELAND

XC660D

(v. 3.5h)

INDEX

1. BEFORE PROCEEDING 5
1.1 CHECK THE SW REL. OF THE XC660D 5

2. GENERAL WARNING 5
2.1 PLEASE READ BEFORE USING THIS MANUAL 5
2.2 SAFETY PRECAUTIONS 5

3. GENERAL DESCRIPTION 6

4. PROBES RELATED TO THE XC660D 6
4.1 PP07, PP11, PP30 PP50: 4÷20MA PRESSURE TRANSDUCERS 6
4.2 NP4-67: PIPE MOUNTING TEMPERATURE PROBE 6

5. WIRING & ELECTRICAL CONNECTIONS 7
5.1 GENERAL WARNINGS 7
5.2 WIRING CONNECTIONS 7
5.3 REMOTE KEYBOARD CONNECTION – ONLY FOR XC660D -7X0XX- OR XC660D -7X2XX- 8
5.4 PROBES CONNECTION 8
5.5 LOAD CONNECTIONS 9
5.6 SAFETY AND CONFIGURABLE DIGITAL INPUTS – FREE VOLTAGE 9
5.7 CIRCUIT WITH 1 SUCTION AND 1 CONDENSER: HP – LP PRESSURE SWITCH CONNECTIONS 10
5.8 CIRCUIT WITH 2 SUCTIONS AND 1 CONDENSER: HP – LP PRESSURE SWITCH CONNECTIONS 10
5.9 ANALOG OUTPUT CONNECTION 11
5.10 HOW TO CONNECT MONITORING SYSTEM - RS485 SERIAL LINE 11

6. MOUNTING & INSTALLATION 11
6.1 VC660 – KEYBOARD INSTALLATION 11

7. FIRST INSTALLATION 12
7.1 HOW TO SET THE KIND OF GAS 12
7.2 HOW TO SET THE RANGE OF THE PRESSURE PROBES 12

8. USER INTERFACE 13
8.1 DISPLAYING 13
8.2 KEYBOARD 13
8.3 ICONS 14

9. HOW TO SEE AND MODIFY THE SET POINT(S) 15
9.1 HOW TO SEE THE SET POINT OF COMPRESSORS AND/OR FANS 15
9.2 HOW TO MODIFY THE SET POINT OF COMPRESSORS AND/OR FANS 15

10. THE INFO MENU 15

11. PARAMETERS PROGRAMMING 16
11.1 HOW TO ENTER THE "PR1" PARAMETER LIST 16
11.2 HOW TO ENTER IN PARAMETERS LIST "PR2" 16
11.3 HOW TO CHANGE PARAMETER VALUES 17

12. HOW TO DISABLED AN OUTPUT 17
12.1 HOW TO DISABLED AN OUTPUT DURING A MAINTENANCE SESSION. 17
12.2 OUTPUT DISABLED SIGNALING. 17
12.3 REGULATION WITH SOME OUTPUTS DISABLED. 18

13. RUNNING HOURS OF LOADS 18
13.1 HOW TO DISPLAY THE RUNNING HOURS OF A LOAD. 18
13.2 HOW TO RESET THE RUNNING HOURS OF A LOAD. 18

14. ALARM MENU 18
14.1 HOW TO SEE THE ALARMS 18

15. KEYBOARD LOCKING 19
15.1 HOW TO LOCK THE KEYBOARD 19
15.2 TO UNLOCK THE KEYBOARD 19

16. USE OF THE PROGRAMMING "HOT KEY " 19
16.1 HOW TO PROGRAM A HOT KEY FROM THE INSTRUMENT (UPLOAD) 19
16.2 HOW TO PROGRAM AN INSTRUMENT USING A HOT KEY (DOWNLOAD) 19

17. LIST OF PARAMETERS 20
17.1 PLANT DIMENSIONING AND TYPE OF REGULATION. 20
17.2 PROBES CONFIGURATION 24
17.3 CONFIGURABLE DIGITAL INPUTS CONFIGURATION 26
17.4 DISPLAY AND MEASUREMENT UNIT 27
17.5 COMPRESSOR REGULATION 28
17.6 LIQUID INJECTION THERMOSTAT – ONLY SCREW COMPRESSORS 29
17.7 FANS REGULATION 29
17.8 ALARMS – COMPRESSOR SECTION 29
17.9 ALARMS – FANS SECTION 31
17.10 SUCTION SUPERHEAT OF CIRCUIT 1 31
17.11 DYNAMIC SET POINT FOR FAN 32
17.12 ANALOG OUTPUT 1 (OPTIONAL) – TERMINALS 25-26 32
17.13 ANALOG OUTPUT 2 (OPTIONAL) – TERMINALS 27-28 33
17.14 OTHER 33

18. EVEN CAPACITY COMPRESSORS (CTYP = SPO) 34
18.1 COMPRESSORS WITH SAME CAPACITY – DEAD BAND CONTROL 34

19. UNEVEN CAPACITY COMPRESSORS (CTYP = DPO) 35

20. SCREW COMPRESSORS (CTYP = SCR) 35
20.1 REGULATION WITH SCREW COMPRESSORS LIKE BITZER/ HANBELL/ REFCOMP ETC 36

21. FAN REGULATION 36

21.1 CONDENSER WITH INVERTER OR ECI FANS–ANALOG OUTPUT SETTING 37
21.2 ANALOG OUTPUT "FREE" 38

22. ADDITIONAL FUNCTIONS 40
22.1 COMPRESSOR RUNNING PROOF FUNCTION 40
22.2 FLOOD PROTECTION FUNCTION 41
22.3 SUCTION SUPERHEAT MONITORING 42
22.4 HOT GAS INJECTION VALVE 43

23. ALARM LIST 43
23.1 TYPES OF ALARMS AND SIGNALING MANAGED 43
23.2 BUZZER MUTING 47
23.3 ALARM CONDITIONS – SUMMARY TABLE 47

24. TECHNICAL FEATURES 50

25. PARAMETERS – DEFAULT VALUES 51

1. BEFORE PROCEEDING

1.1 Check the sw rel. of the XC660D

1. **Look at the SW rel. of XC64D printed on the label of the controller.**

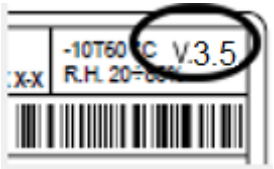

2. **If the SW release is 3.4, proceed with this manual otherwise contact Copeland Controls to get the right manual.**

2. GENERAL WARNING

2.1 ⚠ Please read before using this manual

- This manual is part of the product and should be kept near the instrument for easy and quick reference.
- The instrument shall not be used for purposes different from those described hereunder. It cannot be used as a safety device.
- Check the application limits before proceeding.
- Copeland Controls Srl reserves the right to change the composition of its products, even without notice, ensuring the same and unchanged functionality.

2.2 ⚠ Safety Precautions

- Check the supply voltage is correct before connecting the instrument.
- Do not expose to water or moisture: use the controller only within the operating limits avoiding sudden temperature changes with high atmospheric humidity to prevent formation of condensation
- Warning: disconnect all electrical connections before any kind of maintenance.
- The instrument must not be opened.
- In case of failure or faulty operation send the instrument back to the distributor or to “Copeland Controls S.r.l.” (See address) with a detailed description of the fault.
- Consider the maximum current which can be applied to each relay (see Technical Data).
- Ensure that the wires for probes, loads and the power supply are separated and far enough from each other, without crossing or intertwining.
- Fit the probe where it is not accessible by the end user.
- In case of applications in industrial environments, the use of mains filters (our mod. FT1) in parallel with inductive loads could be useful.

3. General description

The XC660D is designed to manage both compressors and fans in a condensing system such as a pack. The compressors can be scroll or Stream, simple or multistage.
It's possible to manage up to 2 suction circuits with a common condenser.
Control is by means of a neutral zone and is based on the pressure or temperature sensed in the LP suction (compressors) and HP (condenser) circuits. A special algorithm balances the run hours of the compressors to distribute the work load uniformly.
The controllers can convert both LP and HP pressures and displays them as temperatures.
The front panel offers complete information on the system's status by displaying the suction and condenser pressure (temperatures), the status of the loads, possible alarms or maintenance conditions.
Each load has its own alarm input that is able to stop it when activated. To guarantee the total system's safety, there are also two inputs for low and high pressure switches: when these are activated, the system is stopped.
By means of the HOT KEY the controller can be easy programmed at power on.
The controller can be connected to the X-WEB, controlling and monitoring system, thanks to the RS485 serial output, using the standard ModBus RTU protocol.

4. PROBES RELATED TO THE XC660D

4.1 PP07, PP11, PP30 PP50: 4÷20mA pressure transducers

NAME	CABLE LENGTH	RANGE	COPELAND CONTROLS CODE
PP07	2,0MT	-0,5+7bar rel FE	BE009302 00
PP11	2,0MT	-0,5+7bar rel FE	BE009302 07
PP30	2,0MT	0+30 bar rel FE	BE009302 04
PP50	2,0MT	0+50 bar rel FE	BE009002 05

4.2 NP4-67: pipe mounting temperature probe

The NP4-67 temperature probe can be used on the discharge line to monitor the discharge temperature of the Digital Scroll compressor.

NP4-67 1.5MT NTC probe
Measurement range: -40+110°C,
Cable 1,5mt
Code BN609001 52

5. WIRING & ELECTRICAL CONNECTIONS

5.1 General warnings

Before connecting cables make sure the power supply complies with the instrument's requirements.

Separate the probe cables from the power supply cables, from the outputs and the power connections.
Do not exceed the maximum current allowed on each relay 5A resistive, in case of heavier loads use a suitable external relay.

5.2 Wiring connections

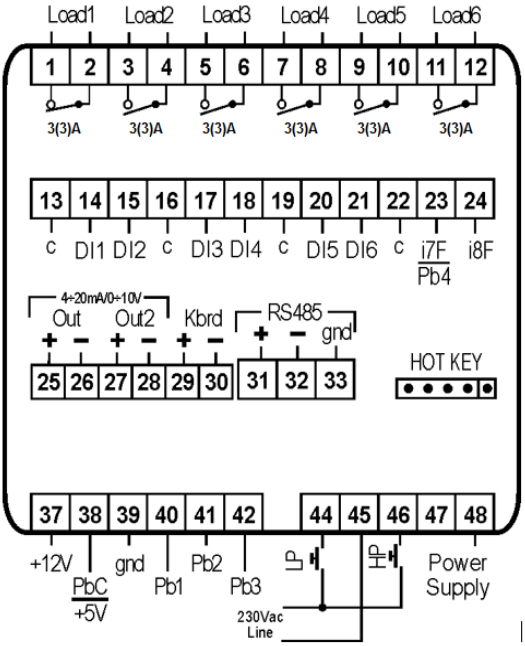

NOTE
120V version: use terminals 47-48 for power supply: Terminals 44-45-46 operate at 120V
24V version: use terminals 47-48 for power supply;
90-260V version: use terminals 47-48 for power supply: Terminals 44-45-46 operate at the same voltage

5.3 Remote keyboard connection – Only for XC660D -7x0xx- or XC660D -7x2xx-

****** ONLY FOR THE MODELS WITH 90-260Vac POWER SUPPLY IDENTIFIED BY THE FOLLOWING PART NUMBERS: XC660D -7x0xx- or XC660D -7x2xx-******

The VC660, remote keyboard for XC600D series, can be connected only to the models with the above part numbers.
Use shielded 2 wires cable AWG 20, max allowed distance between controller and keyboard: 30m.
Respect the polarity indications: as for the following table

XC660D -7x0xx- or XC660D -7x2xx-	VC660
Terminal:29 (+)	Terminal: 1 (+)
Terminal:30 (-)	Terminal: 3 (-)

5.4 Probes connection

5.4.1 General warnings

Pressure probe (4 - 20mAor ratiometric): respect the polarity. If using terminal ends be sure there are no bear parts which could cause short circuiting or introduce noise disturbance at high frequencies. To minimize the induced disturbances use shielded cables with the shield connected to earth.
Temperature probe: it is recommended to place the temperature probe away from direct air streams to correctly measure the temperature.

5.4.2 Probe wirings

Low voltage side : Keep the cables away from the power cables. Use shielded cable to lengthen the cables.

NOTE1: The PIN 38 is the common line for the temperature probes
NOTE2: The PIN 37 gives a 12Vdc supply for the 4-20mA pressure transducers

PP07 PP11, PP30, PP50 4÷20mA pressure transducers respect the polarity. **Suction 1 (P1C = Cur)** Brown (+) to terminal 37; white (-) to terminal 40 **Condenser (P2C = Cur)** Brown (+) to terminal 37; white (-) to terminal 41 **Suction 2 - optional (P3C = Cur)** Brown (+) to terminal 37; white (-) to terminal 42	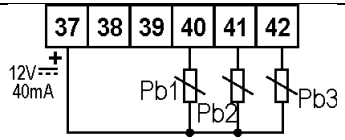
Temperature probes (NTC 10K) **Suction:** 38-40 **(P1C = NTC)** **Condenser:** 38-41 **(P2C =NTC)** **Suction 2 - optional (P3C = NTC):** 38-42 **Pb4 (P4C = NTC):** 38-42	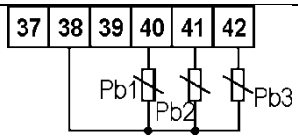

<u>Ratiometric transducers</u> (0.5÷4.5Vdc) **Suction 1 (P1C = 0-5)** 40 (In); 38(+); 39 (gnd) **Condenser (P2C =0-5)** 41 (In); 38(+); 39 (gnd) **Suction 2 - optional (P3C = 0-5)** 42 (In); 38(+); 39 (gnd)	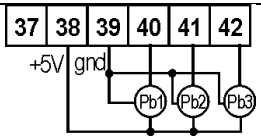

5.5 LOAD CONNECTIONS

The XC660D is provided with 6 relay, as shown on the picture. The relay functionality depends on the setting of the parameters oA1÷oA6. According to the features of the loads, suitable external contactors have to be used to supply the loads properly.	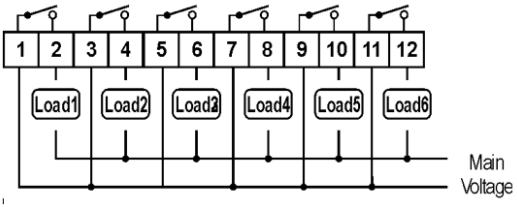

5.6 SAFETY AND CONFIGURABLE DIGITAL INPUTS – FREE VOLTAGE

5.6.1 <u>Loads safety inputs</u>

Controller has 8 configurable digital inputs, **free voltage**.
Each digital input can be set by the related parameter iF01,.. iF08.
The first 6 digital inputs are factory pre-set to operate as safety input for loads.
Each input must collect the status of the safety devices related to the compressor such as thermistors, pressure switches etc.
When this input is activated the correspondence load is switched off and not considered for the regulation.
The correspondence between loads (compressors or fans) and safety inputs is the following

LOAD	TERM.	SAFETY INPUT	TERM.	SETTING	CONNECTION
Load 1	1-2	Di1	13-14	iF01 = oA1	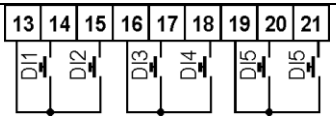
Load 2	3-4	Di2	13-15	iF02 = oA2	
Load 3	5-6	Di3	16-17	iF03 = oA3	
Load 4	7-8	Di4	16-18	iF04 = oA4	
Load 5	9-10	Di5	16-18	iF05 = oA5	
Load 6	11-12	Di6	16-18	iF06 = oA6	

5.6.2 <u>Configurable digital inputs.</u>

The controller XC660D is provided with 2 additional configurable digital inputs, the first one can operate also as probe.

Their functions are set by the parameter iF07 and iF08 respectively.
They can be used for liquid level monitoring, activate the energy saving function or silence mode from a external devices.
The digital input connection is explain in the following table

Digital input	TERMINALS	Related parameter	CONNECTION
DI7 configurable input/Probe 4	22-23 (i1F/Pb4)	**iF07:** function **iP07:** polarity	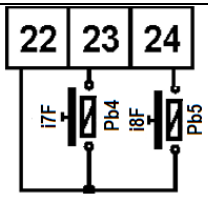
DI8 configurable input/Probe 5	22-24 (i8F/Pb5)	**iF08:** function **iP08:** polarity	

5.7 Circuit with 1 SUCTION and 1 CONDENSER: HP – LP Pressure switch connections

!!!WARNING: controller is provided with both free voltage digital inputs, and main voltage inputs.!!!!

NOTE: The main voltage inputs are designed **only** for HP and LP pressure switches.

The **low pressure switch** has to be connected to the terminal 45 (common) and 46 (line)
The **high pressure switch** has to be connected to the terminal 45 (common) and 44 (line)
as shown on the following wiring diagram.

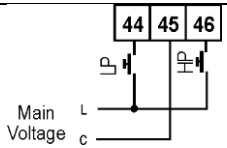	NOTE: the main voltage is related to the voltage supply of the controllers. **Models at 115V or 230V** the inputs operate at 115 or 230V. **Models at 24V** the inputs operate at 24V.

5.8 Circuit with 2 SUCTIONS and 1 CONDENSER: HP – LP Pressure switch connections

In case of racks with 2 suction circuits and 1 condenser the LP1, low pressure switch, and HP high pressure switch, must be connected to the terminals 44-45 and 45-46 as explained in the following wiring diagram

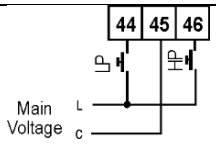	**NOTE**: the main voltage is related to the voltage supply of the controllers. **Models at 115V or 230V** the inputs operate at 115 or 230V. **Models at 24V** the inputs operate at 24V.

5.8.1 Suction 2: connection of the Low Pressure switch,

The **LP2 low pressure switch** of circuit 2, **must be a free of voltage** signal.
To manage it, set:
i8F = LP2 and then connect it to the terminals 22-24.

5.9 Analog output connection

The controller supply up to 2 analog outputs, terminals, kind of output and functionality are shown in the following table

	Terminals	Related parameter
Analog output 1	25[+] – 26[-].	**AOC:** Kind of signal (4-20mA/0-10V) **AOF:** function
Analog output 2	27[+] – 28[-].	**2AOC:** Kind of signal (4-20mA/0-10V) **2AOF:** function

5.10 How to connect monitoring system - RS485 Serial line

The **Adr** parameter is the number to identify each electronic board. **Address duplication is not permitted**, in this case the communication with monitoring system is not guaranteed (the **Adr** is also the ModBUS address).

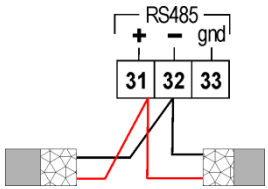

1) Terminals [**31**] [+] and [**32**] [-].
2) Use shielded twisted cable. For example Belden® 8762 o 8772 or cat 5 cables.
3) Maximum distance 1Km.
4) Don't connect the shield to the earth or to GND terminals of the device, avoid accidental contacts by using insulating tape.

6. Mounting & installation

The instruments are suitable only for internal use.
Instrument **XC660D** shall be mounted on an omega DIN rail
The ambient operating temperature range is between -10÷60°C.
Avoid locations subject to heavy vibration, corrosive gases or excessive dirt. The same applies to the probes. Ensure ventilation around the instrument.

6.1 VC660 – KEYBOARD INSTALLATION

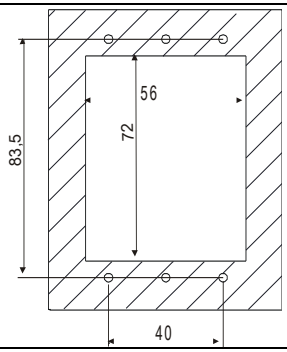

Keyboard **VC660** shall be mounted on vertical panel, in a 72x56 mm hole, and fixed using screws ∅ 3 x 2mm. To obtain an IP65 protection grade use the front panel rubber gasket (mod. RGW-V).

7. First installation

At first installation, it's necessary the following:

1. **Select the kind of gas.**
2. **Set the range of the pressure probes.**

In the following paragraph a short cut for the above operations.
Chapters 11 Parameters programming and 0 will show in detail these operations.

7.1 How to set the kind of gas

The kind of gas is set by the parameter FtyP.
The controller has memorized the relation between temperature and pressure for some gases.

The pre-set gas is: r448. (FtyP=r448)

If another gas is used, act as in the following:
1. Enter the Programming mode by pressing the **Set** and **DOWN** key for 3s.
2. Select the "**Pr2**" parameter. Then enter the password **3 2 1 0**.
3. Select the **FtyP, kind of gas,** parameter.
4. Press the "**SET**" key: the value of the parameter will start blinking.
5. Use "**UP**" or "**DOWN**" to change the gas among the following:
   r22= r22**; r32** = r32; **r134=**r134, **r290** = r290; **r404=**R404A**; 407A** = r407A; **407C=** r407C; **407F=** r407F; **410**= r410; **r448** = r448A; **r449** = r449A, **r450** = r450A; **r452** = r452A; **507=**R507**; r513=**R513; **14EE=** r1234ze; **CO2**= CO2; **515b (*)** = r515b**; 454A (*)**= R454A**; 454b (*)**= R454B**; 454C (*)**= R454B**; 455A (*)**= R455A**; 14YF (*)**= R1234ze
   (*) Present only in 3.5h or following release
6. Press **"SET**" t**o st**ore the new value and move to the followi**ng pa**ram**eter.**

To exit: Press **SET + UP or wait** 30s without pre**ssi**ng a key.

NOTE: the set value is stored even when the procedure is exited by waiting the time-out to expire.

7.2 How to set the range of the pressure probes

If an instrument with the following part number is used: XC660D – xxxxF, it is pre-set to work with pressure probe with the following range:
Suction Probe : -0.5 ÷11.0 bar (relative pressure);
Discharge Probe : 0÷30.0 bar (relative pressure)

If the probes you're using have a different range act as in the following:

To set the pressure range of the **Probe 1 (suction probe)** use the parameter:
PA04: Adjustment of read out corresponding to 4mA (0.5V)
PA20: **Adjustment of read out corresponding to 20mA (4.5V)**

To set the pressure range of the **Probe 2 (Condenser probe)** use the parameter:
FA04: Adjustment of read out corresponding to 4mA (0.5V)
FA20: **Adjustment of read out corresponding to 20mA (4.5V)**

Practically these parameters have to be set with the start and end scale of the probe range.

How to do:

1. Enter the Programming mode by pressing the **Set** and **DOWN** key for 3s.
2. Select the "**Pr2**" parameter. Then enter the password 3 2 1 0.
3. Select the **PA04, adjustment of read out corresponding to 4mA (0.5V),** parameter.
4. Press the "**SET**" key: the value of the parameter will start blinking.
5. Set the lower value of the probe range.
6. Push the **SET** key to confirm the value. The **PA20: adjustment of read out corresponding to 20mA (4.5V)** parameter will be displayed.
7. Set the higher value of the range.
8. Push the **SET** key to confirm the value. Next parameter will be displayed.

Do the same things for the Probe 2, **FA04, FA20** parameters**.**

8. User interface

8.1 Displaying

UPPER DISPLAY	LOWER DISPLAY	ICONS
Suction temperature or pressure	Discharge temperature or pressure	- Working loads - Measurement unit - Alarm or status Icons

8.2 Keyboard

SET **(SET)**

Standard visualization: to see or modify the set point. In programming mode it selects a parameter or confirms an operation.

Alarm menu: By holding it pressed for **3s,** the current alarm is erased.

(UP).

In programming mode: it browses the parameter codes or increases the displayed value.

With Hot key inserted: it starts the Hot key programming procedure.

To access the INFO menu: push and release it to access the INFO menu.

(**DOWN**)

In programming mode: it browses the parameter codes or decreases the displayed value.

Manual restart of loads: By holding it pressed for **3s,** it switches on again loads previous locked by a safety digital input alarm.

MAINTEINANCE/CLOCK: To display the loads running hours
By holding it pressed for 3s the **Maintaining menu** is entered

To enter the Alarm menu

KEY COMBINATIONS

▲ + ▼ To lock and unlock the keyboard.

SET + ▼ To enter the programming mode.

SET + ▲ To exit the programming mode.

8.3 Icons

LED	FUNCTION	MEANING
°C	ON	Celsius degrees
°F	ON	Fahrenheit degrees
bar	ON	bar displaying
PSI	ON	PSI displaying
kPa	ON	KPA displaying
1	ON	Load 1 on
1	Flashing	Load 1 is waiting to start (1HZ) or digital input alarm for Load 1 (2Hz). or Load 1 in maintenance status (2Hz).
2	ON	Load 2 on
2	Flashing	Load 2 is waiting to start (1HZ). or digital input alarm for Load 2 (2Hz). or Load 2 in maintenance status (2Hz).
3	ON	Load 3 on
3	Flashing	Load 3 is waiting to start (1HZ). or digital input alarm for Load 3 (2Hz). o Load 3 in maintenance status (2Hz).
4	ON	Load 4 on
4	Flashing	Load 4 is waiting to start (1HZ). or digital input alarm for Load 4 (2Hz). o Load 4 in maintenance status (2Hz).
5	ON	Load 5 on
5	Flashing	Load 5 is waiting to start (1HZ). or digital input alarm for Load 5 (2Hz). o Load 5 in maintenance status (2Hz).
6	ON	Load 6 on
6	Flashing	Load 6 is waiting to start (1HZ). or digital input alarm for Load 6 (2Hz). o Load 6 in maintenance status (2Hz).
	ON	The Maintenance menu has been entered
	Flashing	One or more loads have been placed in maintenance status
LP	ON	Low pressure switch alarm
HP	ON	High pressure switch alarm
	ON	Alarm is happening
	ON	All the stored alarms have been seen.
	Flashing	A new alarm has happened

	ON	Energy saving activated

9. How to see and modify the set point(s)

9.1 How to see the set point of compressors and/or fans

If the controller is managing both compressors and fans, both the set points are displayed in sequence, otherwise only the set point of the enabled section will be displayed.

1) Push and release the **SET** key;
2) The Lower display will show the **"SEtC"** label, while the Upper display will show its value.
3) If second suction is configured, by pushing again the **SET** key the Lower display will show the **"StC2"** label, while the Upper display will show its value
4) To see the fan set point, push again the **SET** key.
5) The Lower display will show the **"SEtF"** label, while the Upper display will show the fan set point.

To exit: push the **SET key** or wait for 30 without pressing any keys.

9.2 How to modify the set point of compressors and/or fans

********WARNING: before setting the target set points for the first time, check and, if necessary, modify the type of refrigerant gas (par. FtyP) and the default unit of measurement (par. dEU) for compressors and fans ************

PRE-ACTION

1. **Set the kind of refrigerant by means of the FtyP parameter (see 7.1** How to set the kind of gas**)**
2. **Set the measurement unit (dEU par.).**
3. **Check and if necessary modify the set point limits (LSE and HSE par.).**

PROCEDURE

1. Push the **SET** key for more than 2 seconds;
2. The Lower display will show the **"SEtC1"** label, will the Upper display will show its value flashing.
3. To change the suction set point value, push the ▲ or ▼ within 30s.
4. To memorize the new value and pass to the fan set point, push the **SET** key.
5. If the second circuit is enabled the Lower display will show the **"SEtC2"** label, will the Upper display will show its value flashing.
6. To change the suction set point value, push the ▲ or ▼ within 30s.
7. To memorize the new value and pass to the fan set point, push the **SET** key.
8. The Lower display will show the **"SEtF"** label, will the Upper display will show the fan set point flashing.
9. To change its value, push the ▲ or ▼ within 30s.

To exit: push the **SET key** or wait for 30 without pressing any keys.

10. The INFO menu

The controller can display some information directly from the main menu.
The INFO menu is accessible by pushing and releasing the **UP** key:

Here below the list of the information that can be displayed:
NOTE: this information is displayed only if the related function is enabled

- **P1t:** temperature value of the P1 probe
- **P1P:** pressure value of the P1 probe
- **P2t:** temperature value of the P2 probe
- **P2P:** pressure value of the P2 probe (if P2 present)
- **P3t:** temperature value of the P3 probe (if P3 present)
- **P3P:** pressure value of the P3 probe (if P3 present)
- **P4t:** temperature value of the P4 probe (if P4 present)
- **P5t:** temperature value of the P5 probe (if P5 present)
- **LInJ**: status of the injection output ("On" – "OFF"), This information is available only if one relay, oA2 ÷oA4 is set as "Lin".
- **SEtd**: value of the **Dynamic Set point.**
  This information is available only if the Dynamic set point function is enabled (par. dSEP ≠ nP)
- **AO1** Percentage of the analog output 1 (4-20mA or 0-10V).
- This information is always available
- **AO2:** Percentage of the analog output 2 (4-20mA or 0-10V).
- This information is always available
- **SSC1: Supervising Set for circuit 1,** if supervising system is sending the set point to the controller
- **SSC2: Supervising Set for circuit 2,** if supervising system is sending the set point to the controller
- **SStF: Supervising Set for fan,** if supervising system is sending the set point to the controller
- **SH: Superheat**

EXIT: push the **SET+UP keys** together.

11. Parameters programming

11.1 How to enter the "Pr1" parameter list

To enter the "Pr1" parameter list, user accessible, operate as follows:

1. Hold pressed the **SET** and **DOWN** key for 3s.
2. The controller displays the name of the parameter in the Lower display, its value on the Upper display.
3. Press the "**SET**" key: the value of the parameter will start blinking.
4. Use "**UP**" or "**DOWN**" to change the value.
5. Press "**SET**" to store the new value and move to the following parameter.

To exit: Press **SET + UP** or wait 30s without pressing a key.

NOTE: the set value is stored even when the procedure is exited by waiting the time-out to expire.

11.2 How to enter in parameters list "Pr2"

The "Pr2" parameter list is protected by a security code (Password).

SECURITY CODE is 3210

To access parameters in "**Pr2**":

1. Enter the “Pr1” level.
2. Select “Pr2” parameter and press the “**SET**” key.
3. The flashing value “0 ---” is displayed.
4. Use ▲ or ▼ to input the security code and confirm the figure by pressing “**SET**” key.
5. Repeat operations 2 and 3 for the other digits.

NOTE: each parameter in “Pr2” can be removed or put into “Pr1” (user level) by pressing **“SET”** + ▼. When a parameter is present also in “Pr1” decimal point of the lower display is on.

11.3 How to change parameter values

1. Enter the Programming mode.
2. Select the required parameter with ▲ or ▼.
3. Press the “**SET**” key the value start blinking.
4. Use ▲ or ▼ to change its value.
5. Press “**SET**” to store the new value and move to the following parameter.

To exit: Press **SET + UP** or wait 15s without pressing a key.

NOTE: the new programming is stored even when the procedure is exited by waiting the time-out.

12. How to disabled an output

To disabled an output during a maintenance session means to exclude the output from the regulation.

12.1 How to disabled an output during a maintenance session.

1. Push the **MAINTENANCE/CLOCK (**) key for 3s.
2. The LED’s of the first output is switched on, the Lower display shows the “**StA**” label, while the Upper display shows the “**On**” label if the first output is enabled, or the **“oFF”** label if the output is disabled for a maintenance section.
   With compressor with more steps all the LED’s linked to the compressor and the valves are switched on..
3. Select the output by pressing the **UP** or **DOWN** key.
4. **To modify the status of the output**: push the **SET** key, the status of the output starts flashing, then push the UP or DOWN to pass from “**On**” to “**OFF**” and vice versa.
5. Push the **SET** key to confirm the status and pass to the next output..

To exit: push the **CLOCK** key or wait 30 sec

12.2 Output disabled signaling.

If an output is disabled its led blinks (2 Hz)

12.3 Regulation with some outputs disabled.

If some outputs are disabled they don't take part to the regulation, so the regulation goes on with the other outputs.

13. Running hours of loads

13.1 How to display the running hours of a load.

The controller memorizes the running hours of each load.

To see how long a load has been working follow this procedure:

1. Press and release the "**MAINTENANCE/CLOCK (**)" key.
2. The LED of the first output is switched on, the **Upper Display** shows the **"HUr"** label, while the **Lower Display** shows the shows the running hours of the first output.
3. To see the running hours of the following load press the UP key .

To exit: push the key or wait 30 sec

13.2 How to reset the running hours of a load.

1. Display the running hour according to the above procedure.
2. Select the load by pressing the UP key.
3. Push the **SET** key (immediately on the lower display the **rSt** label is displayed).
4. Hold pushed the key for some seconds till the **"rSt"** label starts flashing and the lower display shows zero.

To exit: push the **CLOCK** key or wait 30 sec

NOTE: if the **SET** key is released within 2s, the controller reverts to display the running hours of the selected loads..

14. Alarm Menu

The controller memorizes the last 20 alarms happened, together with their duration..
To see the alarm codes see par. **par. 21.2.**

14.1 How to see the alarms

1. Push the **Alarm** key**.**
2. The last alarm happened is showed on the Upper display, while the lower display shows its number.
3. Push again the ▲ key and the other alarm are displayed starting from the most recent.
4. To see the alarm **duration** and push the **SET** key.
5. By pushing again the ▲ **or SET** key the next alarm is displayed.

Alarms erasing.

1. Enter the Alarm Menu.
2. To erase the displayed alarm push the "**SET**" key till the "rSt" label will be displayed in the Lower Display,

NOTE the running alarms cannot be erased..

3. To erase the whole Alarm Menu, hold pressed the "**SET**" key for 10s.

15. Keyboard locking

15.1 How to lock the keyboard

1. Keep the ▲ and ▼ keys pressed together for more than 3 s the ▲ and ▼ keys.
2. The "POF" message will be displayed and the keyboard is locked. At this point it is only possible to view the set point or enter the HACCP menu.

15.2 To unlock the keyboard

Keep the ▲ and ▼ keys pressed together for more than 3s till the "**POn"** flashing message appears.

16. Use of the programming "HOT KEY "

16.1 How to program a hot key from the instrument (UPLOAD)

1. Program one controller with the front keypad.
2. When the controller is ON, insert the "**Hot key**" and push ▲ key; the **"uPL"** message appears followed a by flashing **"End"**
3. Push "**SET"** key and the **End** will stop flashing.
4. Turn OFF the instrument remove the **"Hot Key",** then turn it ON again.

NOTE: the "**Err**" message is displayed for failed programming. In this case push again ▲ key if you want to restart the upload again or remove the "**Hot key**" to abort the operation.

16.2 How to program an instrument using a hot key (DOWNLOAD)

1. Turn OFF the instrument.
2. Insert a **programmed "Hot Key" into the 5 PIN receptacle** and then turn the Controller ON.
3. Automatically the parameter list of the **"Hot Key"** is downloaded into the Controller memory, the "**doL**" message is blinking followed a by flashing **"End".**
4. After 10 seconds the instrument will restart working with the new parameters.
5. Remove the **"Hot Key".**.

NOTE the message "**Err**" is displayed for failed programming. In this case turn the unit off and then on if you want to restart the download again or remove the "**Hot key**" to abort the operation. The unit can UPLOAD or DOWNLOAD the parameter list from its own E2 internal memory to the **"Hot Key"** and vice-versa.

17. List of parameters

17.1 Plant dimensioning and type of regulation.

The XC660D is pre-set to drive a **rack with 3 compressors and 3 fans**.

oA1 (term. 1-2), oA2 (term. 3-4), oA3 (term. 5-6), oA4 (term. 7-8), oA5 (term. 9-10), oA6 (term. 11-12), relay 1, 2, 3, 4, 5, 6 configuration: by means of these parameters the plant can be dimensioned according to the number and type of compressors and/or fans and the number of steps for each one.
Each relay according to the configuration of the oA(i), where (i) = 1, 2, 3, 4, 5, 6 parameter can work as:

- **Not used: oA(i)** = nu
- **Compressor circuit1**: **oA(i)** = cPr1,
- **Compressor circuit2**: **oA(i)** = cPr2,
- **Step: oA(i) i** = StP
- **Inverter compressor for circuit 1: oA(i)** = inC1
- **Inverter compressor for circuit 2: oA(i)** = inC2
- **Fan: oA(i) =** FAn
- **Fan with inverter/ECI fan: oA(i) =** InF
- **Injection of cooling liquid: oA(i) =** Lin
- **Alarm: oA(i)** = ALr
- **Flood protection function: oA(i)** = Liq
- **Valve for hot gas injection in case of low superheat**: **oA(i)** = HGi

NOTE: also the **"**dGS", "6dG", "dGst" values are present. These values **must not** be used.

COMPRESSORS CONFIGURATION
According to the oA1, oA2, oA3, oA4, oA5, oA6 configuration, 2 kinds of plant can be defined:
Rack with compressors only: all the oAi different from FAn
Rack with compressors and fans: both FAn and CPr are used for oAi.
NOTE: CONFIGURATION OF COMPRESSOR WITH UNLOADERS (STEPS): the output of compressor has to be set before the output for unloaders (steps).
ES. Compressor with 1 unloader: **oA1 = cPr, oA2= StP.**

If compressor with different capacities are used **(CtyP=dPo)**, all the oAi must to be configured as **cPr** (compressor) otherwise the ***configuration alarm "CStP" will be activated.***

If compressors with **different capacities** are used **(CtyP=dPo)**, all the oAi must to be configured as **cPr** (compressor) otherwise the ***configuration alarm "CStP" will be activated.***

If an oAi set as step without any previous oAi set as cPr the configuration alarm "CStP" will be activated.

PLANT CONFIGURATION EXAMPLES:

Plant with 3 compressors 3 fans default configuration with PP11, PP30 pressure transducers: oA1 = CPr1, oA2 = CPr1, oA3 = CPr1, oA4 = FAn, oA5 = FAn, oA6 = FAn,	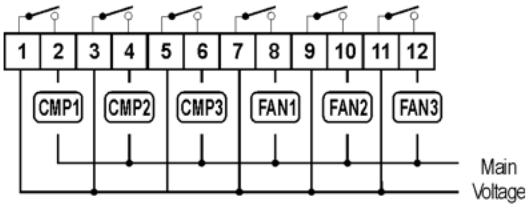

Plant with 4 compressors without fans: oA1 = CPr1, oA2 = CPr1, oA3 = CPr1, oA4 = CPr1, oA4 = nu oA6 = nu	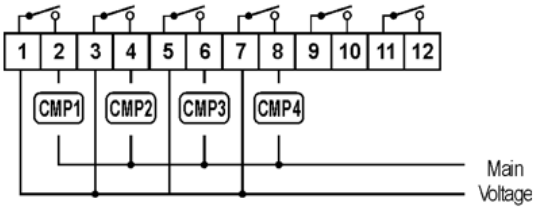
Plant with 1 frequency compressor + 2 standard compressors and inverter for fans: oA1 = InC1, oA2 = CPr1, oA3 = CPr1, oA4 = inF, oA5 = nu, oA6 = nu, AOC = tEn AOF = InC1 2AOC = tEn 2AOF = inF	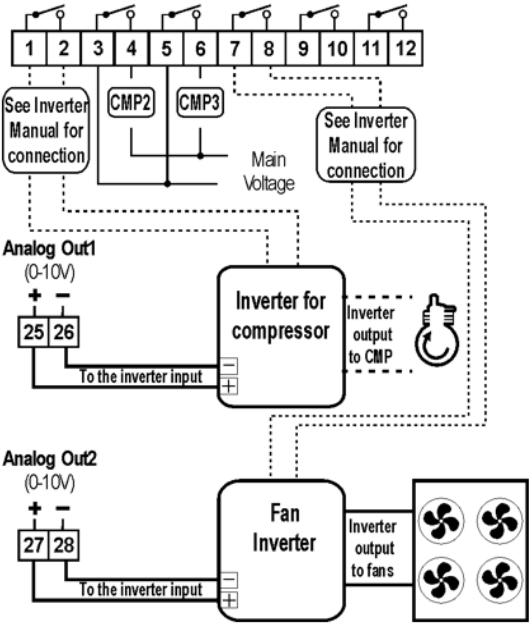

Plant with 4 compressors with inverter for fans: oA1 = CPr1, oA2 = CPr1, oA3 = CPr1, oA4 = CPr1, oA5 = inF* oA6 = nu AOC = tEn AOF = InF *if the inverter requires digital input to start regulation	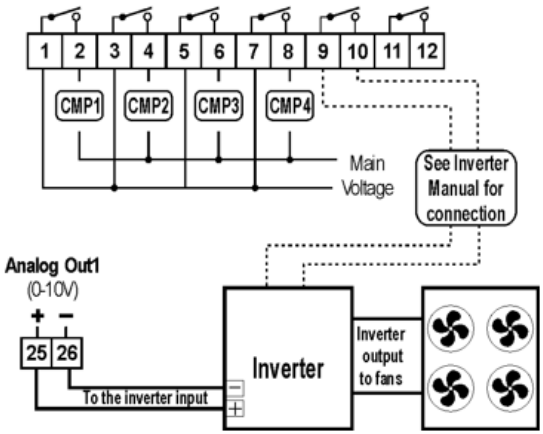
Plant with 1 frequency compressor + 2 standard compressors and 3 fans: oA1 = InC1, oA2 = CPr1, oA3 = CPr1, oA4 = FAn, oA5 = FAn, oA6 = FAn, AOC = tEn AOF = InC1	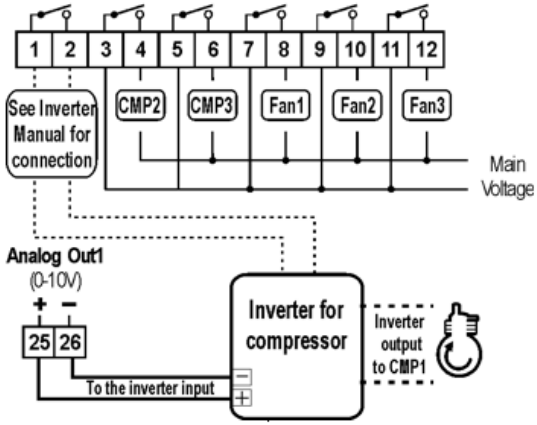

Plant with 3 compressors suction 1 , 3 compressors suction 2, with inverter for fans: **oA1 = CPr1,** **oA2 = CPr1,** **oA3 = CPr1,** oA4 = CPr2, oA5 = CPr2, **oA6 = CPr2,** **AOC = tEn** **AOF = InF**	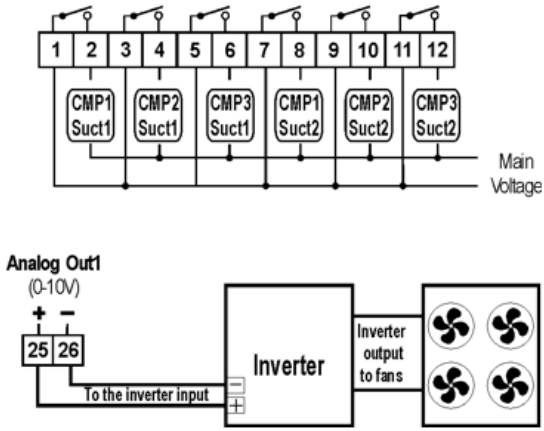

CtyP **Compressor type:** it sets if compressors have the same power (homogeneous) or not.
SPo = **compressors with same capacity**
dPo = **compressor with different capacities**.
Scr = screw compressors.

StP **Valve outputs (unloader) polarity:** polarity of the outputs for capacity valves. It determines the status of the relays associated with the capacity valves (only for homogeneous and stepped-capacity compressors)
oP=valve activated with open contacts of the relay;
cL= valve activated with close contacts of the relay.

PC1..PC6 **Capacity of compressor 1...6:** for setting the capacity of single compressors. It's used only if CtyP=dPo.
Insert in each parameter the capacity of the compressor used.
E.I. 3 compressors with following capacity: 10, 20, 40 HP. The parameters have to be set in this way: PC1=10, PC2=20, PC3=40.

FtyP: **Refrigerant type**: set the kind of gas refrigerant used in the plant:

LABEL	REFRIGERANT	OPERATING RANGE
R22	r22	-50-60°C/-58÷120°F
r32	r32	-70-60°C/-94÷120°F
r134	r134A	-70-60°C/-94÷120°F
r290	r290 – Propane	-50-60°C/-58÷120°F
r404	r404A	-50-60°C/-58÷120°F
407A	r407A	-50-60°C/-58÷120°F
407C	r407C	-50-60°C/-58÷120°F
407F	r407F	-50-60°C/-58÷120°F
r410	r410	-50-60°C/-58÷120°F
r448	r448A	-45-60°C/-69÷120°F
r449	r449A	-45-60°C/-69÷120°F
r450	r450A	-45-60°C/-69÷120°F
r452	r452A	-45-60°C/-69÷120°F
r507	r507	-70-60°C/-94÷120°F
r513	r513	-45-60°C/-69÷120°F

LABEL	REFRIGERANT	OPERATING RANGE
1234 or 14EE(*)	r1234ze	-50-60°C/-58÷120°F
CO2	r744 - Co2	-50-30°C/-58÷86°F
515b (*)	R515B	-50-60°C/-58÷120°F
454A (*)	R454A	-50-60°C/-58÷120°F
454b (*)	R454B	-50-60°C/-58÷120°F
454C (*)	R454C	-50-60°C/-58÷120°F
455A (*)	R455A	-50-60°C/-58÷120°F
14YF(*)	R1234YF	-50-60°C/-58÷120°F

(*) Present only in the 3.5h or the following releases

Sty **Compressors rotation enabling**
YES = **rotation enabled** : this algorithm distributes the working time between the various compressors to ensure even run times.
no = **fixed sequence**: the compressors are enabled and disabled in fixed sequence: first, second etc.
NOTE: If a relay is set as **inverter** is always started as first and switched off as last. In any case, if it is locked because of safety timers, it can be started to maintain the pressure in the regulation band.

rot **Fan rotation enabling**
YES = **rotation enabled**: this algorithm distributes the working time between the various fans to ensure even run times.
no = **fixed sequence**: the fans are enabled and disabled in fixed sequence: first, second etc.

17.2 Probes configuration

Probes can be used in different ways according to plant features, as described in the following table:

17.2.1 Suction probe configuration

P1c: **Suction probe setting (probe 1):**
nP = not used: don't set it;
Cur = 4 ÷ 20 mA pressure transducer; use term. 37(+), 40 (in); 39 (gnd) if present
tEn = 0.5÷4.5V ratiometric pressure transducer; use term. **38**(+), 40 (in); 39 (gnd)
ntc = NTC 10K probe; use term. 38-40

PA04: **Adjustment of read out for the Probe 1** (used only if P1c=Cur or tEn). Corresponding to **4mA or 0.5V** input signal, given by the suction probe (-1.0 ÷ PA20bar; -15÷PA20PSI; -100 ÷ PA20KPA)
E.I. PP11 relative pressure transducer, range -0.5÷11.0 bar. PA04=-0.5; PA20=11.0
PP30 relative pressure transducer, range: 0÷30bar. PA04=0.0; PA20=30.0.

PA20: **Adjustment of read out for the Probe 1** corresponding to **20mA or 4.5V** input signal, given by the suction probe (PA04 ÷ 61.0BAR; PA04 ÷ 885PSI; PA04 ÷ 6100KPA).

CAL: **Probe 1 calibration:** the range depends on the dEU parameter:
dEU=bar or °C: -12.0÷12.0;
dEU=PSI or °F: -200÷200;
dEU=kPA: -999÷999;

17.2.2 Condenser probe configuration

P2c: **Condenser probe setting (probe 2):**
nP = not used:
Cur = 4 ÷ 20 mA pressure transducer; use term. 37(+), 41 (in); 39 (gnd) if present
tEn = 0.5÷4.5V ratiometric pressure transducer; use term. **38**(+), 41 (in); 39 (gnd)

ntc = NTC 10K probe; use term. 38- 41

FA04: **Adjustment of read out for the Probe 2** (used only if P2c=Cur or tEn). corresponding to **4mA or 0.5V** input signal, given by the delivery probe (-1.0 ÷ FA20bar; -15÷FA20PSI; -100 ÷ FA20KPA)

FA20: **Adjustment of read out for the Probe 2** corresponding to **20mA or 4.5V** input signal, given by the condensing probe (FA04 ÷ 61.0BAR; FA04 ÷ 885PSI; FA04 ÷ 6100KPA)

FCAL: **Probe 2 calibration** the range depends on the dEU parameter:
dEU=bar or °C: -12.0÷12.0;
dEU=PSI or °F: -200÷200;
dEU=kPA: -999÷999;

17.2.3 Probe 3 configuration

P3c: **Probe 3 setting:**
nP = not used:
Cur = 4 ÷ 20 mA pressure transducer; use term. 37(+), 42 (in); 39 (gnd) if present
tEn = 0.5÷4.5V ratiometric pressure transducer; use term. **38**(+), 42 (in); 39 (gnd)
ntc = NTC 10K 38-42
nt86 = NTC 86K 38-42

3P04: **Adjustment of read out for the Probe 3** (used only if P3c=Cur or tEn). corresponding to **4mA or 0.5V** input signal, given by the delivery probe (-1.0 ÷ 3P20bar; -15÷3P20 PSI; -100 ÷ 3P20 KPA)

3P20: **Adjustment of read out for the Probe 3** corresponding to **20mA or 4.5V** input signal, given by the condensing probe (3P04 ÷ 61.0BAR; 3P04 ÷ 885PSI; 3P04 ÷ 6100KPA)

O3: **Probe 3 calibration** the range depends on the dEU parameter:
dEU=bar or °C: -12.0÷12.0;
dEU=PSI or °F: -200÷200;
dEU=kPA: -999÷999;

17.2.4 Probe 4 configuration

P4c: **Probe 4 setting (22-23):**
nP = not used:
ntc = NTC 10K
nt86 = NTC 86K
ntcH = NTC 10K extended range (150°C)

O4: **Probe 4 calibration** the range depends on the dEU parameter:
dEU= °C: -12.0÷12.0;
dEU= °F: -200÷200;

17.2.5 Probe 5 configuration

P5c: **Probe 5 setting (22-24):**
nP = not used:
ntc = NTC 10K
nt86 = NTC 86K
ntcH = NTC 10K extended range (150°C)

O5: **Probe 4 calibration** the range depends on the dEU parameter:
dEU= °C: -12.0÷12.0;
dEU= °F: -200÷200;

17.2.6 Probe selection second suction circuit

2CPb: **Probe selection for second suction circuit**
nP = not used:
P1 = Probe 1 – **NOT SET IT**: already used for first suction circuit
P2 = Probe 2 – **NOT SET IT** : already used for fan
P3 = Probe 3 – **SET this probe!**

17.2.7 Probe selection for fan

FPb: Probe selection for condenser fan
nP = not used:
P1 = Probe 1
P2 = Probe 2
P3 = Probe 3

17.3 Configurable digital inputs configuration

iF01 Digital input 1 configuration (13-14)
nu = Not used: the digital input is disabled.
oA1= Safety digital input for load 1, term. 1-2; (Factory setting);
oA2 = Safety digital input for load 2, term. 3-4
oA3 = Safety digital input for load 3, term. 5-6
oA4 = Safety digital input for load 4, term. 7-8
oA5 = Safety digital input for load 5, term. 9-10
oA6 = Safety digital input for load 6, term. 11-12
inF = Safety digital input of inverter for fan, used when none relay is configured as inverter for fans
LP2 = Low pressure switch for circuit 2,
ES = Energy saving;
oFF = instrument shut down;
LL = liquid level alarm
SIL = to enable the silence function
EAL = generic external alarm, it doesn't affect the regulation
Co1 = running proof function for load 1, term. 1-2
Co2 = running proof function for load 2, term. 3-4
Co3 = running proof function for load 3, term. 5-6
Co4 = running proof function for load 4, term. 7-8
Co5 = running proof function for load 5, term. 9-10
Co6 = running proof function for load 6, term. 11-12
NOTE: also the following values **LP1, HP** are present. These values **must not** be used

iF02 Digital input 2 configuration (13-15) – For the values see iF01; Factory setting oA2.

iF03 Digital input 3 configuration (16-17) – For the value see iF01; Factory setting oA3

iF04 Digital input 4 configuration (16-18) – For the value see iF01; Factory setting oA4

iF05 Digital input 5 configuration (19-20) – For the value see iF01; Factory setting oA5

iF06 Digital input 6 configuration (19-21) – For the value see iF01; Factory setting oA6

iF07 Digital input 7 configuration (22-23) - For the values see iF01; Factory setting ES.
NB: THE ABOVE FUNCTIONALITIES ARE ENABLED ONLY WHEN P4C=NP. With P4C = ntc or nt86 or ntcH this input is operating as a NTC 10K or NTC 86K or NTC 10K extended range (150°C) temperature sensor

iF08 Digital input 8 configuration (22-24): For the values see iF01; Factory setting LL
NB: THE ABOVE FUNCTIONALITIES ARE ENABLED ONLY WHEN P5C=NP. With P5C = ntc or nt86 or ntcH this input is operating as a NTC 10K or NTC 86K or NTC 10K extended range (150°C) temperature sensor

iP01 Digital input 1 polarity (13-14):
oP: the digital input is activated by opening the contact;
CL: the digital input is activated by closing the contact.

iP02 Digital input 2 polarity (13-15):
oP: the digital input is activated by opening the contact;
CL: the digital input is activated by closing the contact.

iP03 Digital input 3 polarity (16-17):
oP: the digital input is activated by opening the contact;
CL: the digital input is activated by closing the contact.

iP04 **Digital input 4 polarity (16-18):**
oP: the digital input is activated by opening the contact;
CL: the digital input is activated by closing the contact.

iP05 **Digital input 5 polarity (19-20):**
oP: the digital input is activated by opening the contact;
CL: the digital input is activated by closing the contact.

iP06 **Digital input 6 polarity (19-21):**
oP: the digital input is activated by opening the contact;
CL: the digital input is activated by closing the contact.

iP07 **Digital input 7 polarity (22-23):**
oP: the digital input is activated by opening the contact;
CL: the digital input is activated by closing the contact.

iP08 **Digital input 8 polarity (22-24)**
oP: the digital input is activated by opening the contact;
CL: the digital input is activated by closing the contact.

iP09: **Polarity of High pressure-switch alarm** (terminals 45-46)
oP =HP alarm is signaled without voltage presence
cL= HP alarm is signaled with voltage presence

iP10: **Polarity of Low pressure-switch alarm** (terminals 44-45)
oP =LP alarm is signaled without voltage presence
cL= LP alarm is signaled with voltage presence

d1d **Digital input set as oA1 or Co1 activation delay** (0÷255s), This delay it is considered when i1F or i2F or i3F or i4F or i5F or i6F or i7F or i8F is set as oA1 or Co1

d2d **Digital input set as oA2 or Co2 activation delay** (0÷255s), This delay it is considered when i1F or i2F or i3F or i4F or i5F or i6F or i7F or i8F is set as oA2 or Co2

d3d **Digital input set as oA3 or Co3 activation delay** (0÷255s), This delay it is considered when i1F or i2F or i3F or i4F or i5F or i6F or i7F or i8F is set as oA3 or Co3

d4d **Digital input set as oA4 or Co4 activation delay** (0÷255s), This delay it is considered when i1F or i2F or i3F or i4F or i5F or i6F or i7F or i8F is set as oA4 or Co4

d5d **Digital input set as oA5 or Co6 activation delay** (0÷255s), This delay it is considered when i1F or i2F or i3F or i4F or i5F or i6F or i7F or i8F is set as oA5 or Co6

d6d **Digital input set as oA6 or Co6 activation delay** (0÷255s), This delay it is considered when i1F or i2F or i3F or i4F or i5F or i6F or i7F or i8F is set as oA6 or Co6

did **Liquid level alarm, signaling delay**: (enabled only if a digital input is set as LL) 0÷255min

didA **External alarm, signaling delay**: (enabled only if a digital input is set as EAL) 0÷255min

ALMr **Manual reset of alarms for compressors and fans.**
no = automatic recover of alarm: regulation restart when the correspondent digital input is disabled; **yES** = manual recover for the alarms of compressors and fans See also par.23.1.2

17.4 Display and Measurement unit

The measurement unit of the parameters referred to temperature or pressure depends on the parameters dEU, CF and PMu.

NOTE: The controller automatically converts values of set points and parameters referred to the pressure/temperature when the dEU parameter is changed. In any case check the value of the parameters referred to temperature and pressure after changing dEU.

dEU: **Selection of the kind of measurement unit: pressure or temperature**
dEU = tMP: the parameters referred to pressure/temperature will be expressed in temperature according to the value of the CF parameter (°C or °F)
dEU = PrS: the parameters referred to pressure/temperature will be expressed in pressure according to the value of the PMU parameter (bar, PSI or KPA)

CF **Measurement unit for temperature:** it is used only with dEU = tMP, and it set the measurement unit for parameters referred to temperature/pressure.
°C = Celsius degree
°F = Fahrenheit degree

PMU **Measurement unit for pressure:** it is used only with dEU = PrS, and it set the measurement unit for parameters referred to temperature/pressure.
bar = bar
PSI = PSI
PA = kPA

rES **Resolution for °C and bar** (**in** = integer; **dE**= decimal point)

dEU1 **Default visualization for upper display: PrS**= Pressure; **tPr**= temperature

dSP2 **Probe selection for lower display: nu =** display switched off **- P1 =** Probe 1 **- P2 =** Probe 2 **- P3 =** Probe 3 **- P4 =** Probe 4 **– P5 =** Probe 5 **- StC1 =** Compressor Set Point **- StC2 =** Compressor set point for section 2 **– SetF =** Fan set point

dEU2 **Default visualization for lower display: tPr**= temperature, **PrS**= Pressure;

17.5 Compressor regulation

Pbd **Proportional band or neutral zone width** (0.1÷5.0bar/0.5÷30°C or 1÷150PSI/1÷50°F) The band (or zone) is symmetrical compared to the target set point, with extremes: set-Pbd/2 ÷ set+Pbd/2. It is used as proportional band for PI algorithm.
The measurement unit depends on the dEU, CF, PMU par.

rS **Proportional band offset:** PI band offset. It permits to move the proportional band of the PI. With **rS=0** the band is between Set-Pbd/2 ÷ Set+Pbd/2;

inC **Integration time:** (0 ÷ 999s) PI integration time

2Pbd **Proportional band or neutral zone width for circuit 2** (0.1÷5.0bar/0.5÷30°C or 1÷150PSI/1÷50°F) The band (or zone) is symmetrical compared to the target set point, with extremes: set-Pbd/2 ÷ set+Pbd/2. It is used as proportional band for PI algorithm.
The measurement unit depends on the dEU, CF, PMU par.

2rS **Proportional band offset for circuit 2:** PI band offset. It permits to move the proportional band of the PI. With **rS=0** the band is between Set-Pbd/2 ÷ Set+Pbd/2;

2inC **Integration time for circuit 2:** (0 ÷ 999s) PI integration time

ton **Inverter at maximum capacity before starting a new load** (0÷255s)

toF **Inverter at minimum capacity before stopping a load** (0÷255s)

ESC **Energy saving value for compressors:** (-20÷20bar; -50÷50°C) this value is add to the compressor set point.

2ESC **Energy saving value for compressors of second circuit:** (-20÷20bar; -50÷50°C) this value is add to the compressor set point.

onon: **Minimum time between 2 following switching ON of the same compressor** (0÷255 min).

oFon: **Minimum time between the switching off of a compressor and the following switching on**. (0÷255min). ***Note:*** *usually onon is greater than oFon.*

don: **Time delay between the insertion of two different compressors** (0÷99.5min; res. 10s).

doF: T**ime delay between switching off of two different compressors** (0÷99.5 min; res. 10s)

donF: **Minimum time a stage stays switched ON** (0÷99.5 min; res. 10s)

Maon **Maximum time for compressor ON** (0 ÷ 24 h; with 0 this function is disabled.) If a compressor keeps staying on for the MAon time, it's switched off and it can restart after the oFon standard time.

FdLy: **"don" delay enabled also for the first call.** If enabled, the triggering of the step is delayed for a "don" value, respect to the call. (**no** = "don" not enabled; **yES**="don" enabled)

FdLF "**doF" delay enabled also for the first switching off**. It enables the "doF" delay between the request of a release and the actual switching off. (**no** = "doF" not enabled; **yES**="doF" enabled)

odo: **Regulation delay on start-up:** (0÷255s) on switching ON the instrument starts working after the time delay imposed in this parameter.

LSE: **Minimum set point**: The measurement unit depends on dEU parameter. It sets the minimum value that can be used for the set point, to prevent the end user from setting incorrect values.

HSE: **Maximum set point**: The measurement unit depends on dEU parameter. It sets the maximum acceptable value for set point.

2LSE: **Minimum set point for circuit 2**: The measurement unit depends on dEU parameter. It sets the minimum value that can be used for the set point, to prevent the end user from setting incorrect values.

2HSE: **Maximum set point for circuit 2**: The measurement unit depends on dEU parameter. It sets the maximum acceptable value for set point.

17.6 Liquid injection thermostat – only screw compressors

Lit: **Set point (°C) for cooling injection thermostat** (0 ÷ 150°C) The reference probe is set by LiPr parameter, the thermostat relay is given by the relay set as **oAi = Lin.**

Lid: **Differential for cooling injection thermostat** (0.1 ÷ 10.0) The reference probe is set by LiPr parameter

LiPr **Probe for cooling injection thermostat:**
nP: function disabled
P3: probe P3 (term. 38-42)
P4: probe P4 (term. 22-23)
P5: probe P5 (term. 22-24)

17.7 Fans regulation

Pb **Proportional band zone width** (0.1÷30.0°C; 1÷50°F; 0.1÷10.0bar, 1÷150PSI; 10÷1000KPA).
NOTE: Set the dEU par. and the target set point for fans before setting this parameter.
The band is symmetrical compared to the target set point, with extremes: SETF+Pb/2 ÷ SETF -Pb/2. The measurement unit depends on the dEU par.

ESF **Energy saving value for fans:** (-20÷20bar; -50÷50°C) this value is add to the fans set point.

PbES **Band offset for fan regulation in ES** (-50.0÷50.0°C; -90÷90°F; -20.0÷20.0bar; -300÷300PSI; -2000÷2000KPA). During energy saving

Fon **Time delay between the insertion of two different fans** (0÷255sec).

FoF T**ime delay between switching off of two different compressors** (0÷255 sec)

LSF **Minimum set point for fan**: The measurement unit depends on dEU parameter. It sets the minimum value that can be used for the set point, to prevent the end user from setting incorrect values.

HSF **Maximum set point for fan**: The measurement unit depends on dEU parameter. It sets the maximum acceptable value for set point.

17.8 Alarms – compressor section

PAo: **Alarm probe exclusion at power on.** it is the period starting from instrument switch on, before an alarm probe is signaled. (0÷255 min). During this time if the pressure is out of range all the compressor are switched on.

LAL: **Low pressure (temperature) alarm – compressor section**: The measurement unit depends on dEU parameter: (PA04 ÷ HAL bar; -50.0÷HAL °C; PA04÷HAL PSI; -58÷HAL

°F) It's **independent** from the set point. When the value **LAL** is reached the A03C alarm is enabled, (possibly after the **tAo** delay time).

HAL: **High pressure (temperature) alarm– compressor section**: The measurement unit depends on dEU parameter: (LAL ÷ PA20 bar; LAL÷150.0 °C; LAL÷PA20 PSI; LAL÷302 °F). It's **independent** from the set point. When the value HAL is reached the A04C alarm is enabled, (possibly after the **tAo** delay time).

tAo: **Low and High pressure (temperature) alarms delay– compressor section**: (0÷255 min) time interval between the detection of a pressure (temperature) alarm condition and alarm signaling.

ELP **Electronic pressure switch threshold:** (-50°C÷STC1; -58°F÷STC1; PA04÷STC1); Pressure / Temperature value at which all the compressors are switched off. It has to be set some degrees above the mechanical low pressure switch value, in order to prevent mechanical low pressure activation.

2LAL: **Low pressure (temperature) alarm, compressor section circuit 2**: The measurement unit depends on dEU parameter: (3P04 ÷ 2HAL bar; -50.0÷2HAL °C; 3P04÷2HAL PSI; -58÷2HAL °F) It's **independent** from the set point STC2. When the value **2LAL** is reached the C2LA alarm is enabled, (possibly after the **2tAo** delay time).

2HAL: **High pressure (temperature) alarm, compressor section circuit 2**: The measurement unit depends on dEU parameter: (2LAL ÷ 3P20 bar; 2LAL÷150.0 °C; 2LAL÷3P20 PSI; LAL÷302 °F). It's **independent** from the set point STC2. When the value 2HAL is reached the C2HA alarm is enabled, (possibly after the **2tAo** delay time).

2tAo: **Low and High pressure (temperature) alarms delay, compressor section circuit 2**: (0÷255 min) time interval between the detection of a pressure (temperature) alarm condition and alarm signaling.

2ELP **Electronic pressure switch threshold, compressor section circuit 2:** (-50°C÷STC2; -58°F÷STC2; 3P04÷STC2); Pressure / Temperature value at which all the compressors of second circuit are switched off. It has to be set some degrees above the mechanical low pressure switch value, in order to prevent mechanical low pressure activation.

SEr: **Service request:** (1÷999 hours, res. 10h; 0 = alarm excluded) number of running hours after that the "A14" maintenance call is generated.

PEn: **Low pressure-switch intervention numbers:** (0÷15). If the low pressure-switch is enabled PEn times in the PEI interval, the controller is locked. **Only the manually unlocking is possible**. See also the alarms table at paragraph 21.2. Every time the pressure-switch is enabled all the compressor are turned off.

PEI: **Pressure-switch interventions time** (0÷255 min) Interval, linked to the Pen parameter, for counting interventions of the low pressure-switch..

SPr: **number of steps engaged with faulty probe**. (0÷6).

2PEn: **Low pressure-switch intervention numbers for circuit 2:** (0÷15). If the low pressure-switch is enabled 2PEn times in the 2PEI interval, the compressors of the second circuit is locked. **Only the manually unlocking is possible**. See also the alarms table at paragraph 21.2.
Every time the pressure-switch is enabled all the compressor are turned off.

2PEI: **Pressure-switch interventions time for circuit 2** (0÷255 min) Interval, linked to the 2PEn parameter, for counting interventions of the low pressure-switch of circuit 2.

2SPr: **Number of steps engaged with faulty probe of suction 2**. (0÷6).

dtL **DLT high temperature alarm threshold** (0÷180°C 32÷356°F)

dLd **DLT high temperature alarm delay** (0÷15min)

dLH **DLT high temperature alarm differential for recovery** (0.1÷25.5°C 1÷50°F)

dtLi **Probe selection for DLT control** (nP - P3- P4 -P5)

dtLP **Inverter o digital compressor percentage in case of dtL alarm (**0÷80%)

dtLF **Compressors OFF in case of discharge line temperature alarm** (n,y)

PoPr **Capacity engaged with faulty probe:** (0÷100%) it's used only if CtyP=dPo.

17.9 Alarms – fans section

LAF: **Low pressure alarm – fans section**: The measurement unit depends on the dEU parameter: (FA04 ÷ HAF bar; -50.0÷HAF °C; FA04÷HAF PSI; -58÷HAF °F) It's independent from the set point. When the value LAF is reached the LA2 alarm is enabled, (possibly after the **AFd** delay time).

HAF: **High pressure alarm – fans section**: The measurement unit depends on the dEU parameter: (LAF÷FA20 bar; LAF÷150.0 °C; LAF÷FA20 PSI; LAF÷302 °F). It's independent from the set point. When the value HAF is reached the HA2 alarm is enabled, (possibly after the **AFd** delay time).

AFd: **Low and High pressure alarms delay – fans section**: (0÷255 min) time interval between the detection of a pressure alarm condition in the fans section and alarm signaling.

HFC **Compressors off with high pressure (temperature) alarm for fans**
no = compressors are not influenced by this alarm
yES = compressors are turned off in case of high pressure (temperature) alarm of fans

dHF **Interval between 2 compressors turning off in case of high pressure (temperature) alarm for fans** (0 ÷ 255 sec)

PnF: **High pressure-switch intervention numbers – fans section:** (0÷15 with 0 the manually unlocking is disabled) if the high pressure-switch is enabled PnF times in the PiF interval, the controller is locked. **It can be unlocked only manually**. See paragraph 21.2. Every time the pressure-switch is enabled all the compressors are turned off and all the fans are turned on.

PiF: **Pressure-switch interventions time – fans section** (0÷255 min) Interval, linked to the PEn parameter, for counting interventions of the high pressure-switch..

FPr **Number of fans engaged with faulty probe**. (0÷#fans).

17.10 Suction superheat of circuit 1

ASH0 **Differential for low superheat pre-alarm.** **(**0.1 to 30.0°C/ 1 to 60°F).
The low superheat pre-alarm warning is sent when the superheat (SH) is lower than ASH2 (low superheat alarm threshold) + ASH0, possibly after the ASH1 delay.

ASH1 **Delay for signalling low superheat pre-alarm** (0÷255sec)
If the superheat is below the ASH2+ASH0 threshold for ASH1 time the low superheat pre-alarm warning is sent.

ASH2 **Low suction superheat alarm threshold (**0.1÷15.0°C/ 1÷30°F). With SH < ASH2 the low superheat alarm is sent, possibly after the ASH3 delay

ASH3 **Delay for signalling low superheat alarm** (0÷255sec)
If the superheat is below the ASH2 threshold for ASH3 time the low superheat alarm message is sent.

ASH4 **Switching off compressors with low superheat alarm** (No, Yes)
ASH4 = no: compressors keep on working even with low superheat alarm.
ASH4 = yES: compressors are stopped in case of low superheat alarm.

ASH5 **Differential to restart regulation after of low superheat alarm with compressor stop** (0.1 to 15.0°C/ 1 to 30°F). In case of regulation stop (ASH4= yES), it restarts when SH > ASH2+ASH5

ASH6 **Delay to restart regulation after superheat > ASH2+ASH5 (**0÷255 min). If the regulation is stopped because of low superheat alarm, it can restart when SH>ASH2+ASH5 for the ASH6 time.

ASH7 **Superheat value to enable hot gas injecting valve (**0.1 to 15.0°C/ 1 to 30°F)
With a relay set as hot gas injection valve, (oA2 or oA3 or oA4 = HGi), the relay is on with SH < ASH7 – ASH8.

ASH8 **Differential for ASH7** **(**0.1 to 30.0°C/ 1 to 60°F)

ASH9 **Probe selection for superheat monitoring** (nP, P3, P4)
ASH9 = nP no superheat control

ASH9 = P3 the probe to calculate the superheat (SH) is the probe P3 (term. 38-42)
ASH9 = P4 the probe to calculate the superheat (SH) is the probe P4 (term. 22-23). In this case also the parameter **P4C** must be set as **ntc** or **nt86**.

17.11 Dynamic set point for fan

dSEP **Dynamic set point reference probe**
nP: no probe; function disabled
P3: probe P3 (term. 38-42)
P4: probe P4 (term. 22-23)

dSES **External temperature value to start dynamic regulation** (-50÷150°C; -58÷302 °F)

dSEb **External band width for dynamic set point** (-50.0 ÷ 50.0°C; -90 ÷ 90°F)

dSEd **Set point differential for dynamic set point: (**-20.0÷20.0°C; -50.0÷50.0PSI; -300÷300°F)

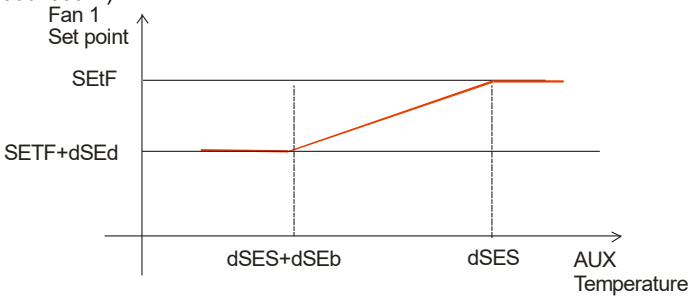

17.12 Analog output 1 (optional) – Terminals 25-26

AoC **Analog output 1 setting**
tEn = 0÷10V output
cUr = 4-20mA output

AOF **Analog output 1 function**
nu = analog output disabled;
Inc1= To drive inverter for suction frequency compressor, suction of circuit 1;
Inc2 = To drive inverter for suction frequency compressor, suction of circuit 2
inF= to drive ECI fan or inverter for fan
FrE = "Free", proportional to the probe P3 and P4.

InCP **Inverter compressor always activated at first:**
no: other compressors if available are allowed to start when the inverter compressor is locked by safety timers. This allows the system to satisfy the cooling demand when the inverter compressor is unavailable.
yES: the inverter compressor is always started as first. If unavailable due to safety timers the regulation will be locked till timers will be over.

AOP **Reference probe for the analog output 1** It is used only if AOP=FrE
nP = not probe
P3 = probe P3
P4 = probe P4

LAO **Temperature value associated to minimum value of analog output (AOM)** (-50.0÷150.0°C, -58÷302°F).

UAO **Temperature value associated to the maximum value of analog output, 10V or 20mA** (-50.0÷150.0°C, -58÷302°F).

AOM **Minimum value for analog output 1 (**4 ÷ 20mA or 0÷10V)

AOt **Time of analog output 1 at max after the start (**0÷15s)

MPM **Maximum % variation per minute of analog output 1:** (nu; 1÷100)
nu = not used: function disabled
1÷100 = it sets the maximum percentage variation per minute of the analog output.
SAO **Percentage of analog output 1 in case of probe failure:** (0 ÷ 100%)
AOH **Maximum analog output 1 percentage when silence mode function is enabled (**0÷100)

17.13 Analog output 2 (optional) – Terminals 27-28

2AoC **Analog output 2 setting**
tEn = 0÷10V output
cUr = 4-20mA output
2AOF **Analog output 2 function**
nu = analog output disabled;
Inc1= To drive inverter for suction frequency compressor, suction of circuit 1;
Inc2 = To drive inverter for suction frequency compressor, suction of circuit 2
inF= to drive ECI fan or inverter for fan
2AOM **Minimum value for analog output 2 (**4 ÷ 20mA or 0÷10V)
2AOt **Time of analog output 2 at max after the start (**0÷15s)
2MPM **Maximum % variation per minute for analog output 2:** (nu; 1÷100)
nu = not used: function disabled
1÷100 = it sets the maximum percentage variation per minute of the analog output.
2SAO **Percentage of analog output 2 in case of probe failure:** (0 ÷ 100%)
2AOH **Maximum analog output 2 percentage when silence mode function is enabled (**0÷100)

17.14 Other

tbA **Alarm relay silencing:** by pushing one of the keypad buttons. **no**= alarm relay stays on; **yES**= alarm relay is switched off by pushing any keys.
OAP **Alarm relay output polarity: cL=**closed when activated; **oP=** opened when activated
oFF **Switching ON/OFF enabling from keyboard:** (**no** = disabled; **yES**= enabled) It permits the switching ON/OFF of the instrument by pressing the SET key for more than 4s.
bUr **Buzzer enabling**
no = the buzzer is not used in case of alarm
yES = buzzer is used in case of alarm
Adr: **Serial address** (1 –247) It is used in monitoring system.
rEL **Software release** for internal use.
SrL **Sub-Release firmware** for internal use
Ptb **Parameter table code**: readable only.
Pr2 **Access to Pr2 parameter level**

18. Even Capacity Compressors (CtyP = Spo)

18.1 Compressors With Same Capacity – Dead band control

This regulation is applied both to the circuit 1 and the circuit 2.
The neutral zone (Pbd) is symmetrical compared to the target set point, with extremes: set+Pbd/2 ... set-Pbd/2. If the pressure (temperature) is inside this zone the controller maintains the same number of loads switched on and off, without changing anything.
When the pressure (temperature) go out from the zone, regulation starts. If the pressure is greater than SET+Pbd/2, the loads are switching on with timing given by parameters: don and doF.
A load is turned on only if his safety times **onon, oFon, donF** are over.
Regulation stops when the pressure (temperature) comes back into the neutral zone.

In the following a simplify example that explains the regulation in neutral zone for compressor homogeneous with 1 step for each compressors. The safety times onon, oFon and donF are not considered. In the real regulation any load is entered or turned off only if these times are over.

Ex. Dead band control, compressors with same capacities, 1 step for each compressor.
In this example:

oA1 = cPr1; oA2 = cPr1; oA3 = cPr1; oA4 =nu; oA5 = nu number of compressors
CtyP = SPo homogeneous compressors;
Sty = yES rotation
FdLy = no “don” delay not enabled at first calling after an equilibrium condition.
dLF = no “doF” delay not enabled at first calling after an equilibrium condition.

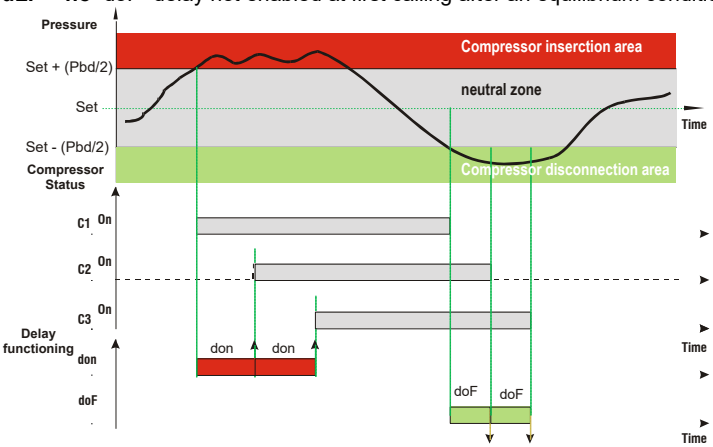

19. UNEVEN CAPACITY COMPRESSORS (CtyP = dPO)

With **CtyP = dPO** the regulation is performed for uneven capacity compressors
In this case the capacity supplied by the system is a combination of the capacity of different compressors.
The capacity of each compressor ha sto be set in the parameters PC1…PC6.

The regulation algorithm supply a combination of the available capacities, starting from the lower ones and increasing step by step according to the requests coming from the system.

With uneven capacity compressors, the algorithm doesn't distribute the working time between the various compressors to ensure even run times.

19.1.1 Regulation example

oA1 = CPr1, oA2 = CPr1, oA3 = CPr1, OA4 = CPr1, oA5 = nu, oA6 = nu.
CtyP = dPo
Pc1 = 10; Pc2 = 15 Pc3 = 30; Pc4 = 40

STEP	Pc1 = 10;	Pc2 = 15	Pc3 = 30;	Pc4 = 40	SYSTEM CAPACITY
1	ON	-	-	-	**10**
2	-	ON	-	-	**15**
3	ON	ON	-	-	**25**
4	-	-	ON	-	**30**
5	-	-	-	ON	**40**
6	-	ON	ON	-	**45**
7	ON	-	-	ON	**50**
8	-	ON	-	ON	**55**
9	ON	ON	-	ON	**65**
10	-	-	ON	ON	**70**
11	ON	-	ON	ON	**80**
12	-	ON	ON	ON	**85**
13	ON	ON	ON	ON	**95**

The transition between the various steps can be carried out only if the safety timers (onon, oFon, donF) have been expired, otherwise the first available step is used.

20. SCREW COMPRESSORS (CtyP = Scr)

*********READ CAREFULLY BEFORE PROCEEDING*********
The controller doesn't manage any time limitation on the activation of the 25% capacity valve.
If the compressor is not design for a long activation of the 25% capacity valve, an external device able to exclude this situation MUST be used. !!!!!
Copeland Controls can't be considered responsible for possible damages caused from this situation

The controller is able to manage only 1 screw compressor, operating on circuit 1.
Loads activation is managed by the neutral zone.
To set it:
CtyP = Scr: in this way the compressor is managed as screw compressor, and the relays set as steps, will follow special activation rules, as explained in the following chapters.

The activation of the valve is designed according to the Bitzer, Hanbell compressors.
Set the relay oA1 = CPr1, it will manage the compressor.
Set the oA2, oA3 and oA4 as “StP”.

20.1 Regulation with screw compressors like Bitzer/ Hanbell/ Refcomp etc

Screw compressors like Bitzer use up to 3 valves for the power regulation.

20.1.1 Relay activation

ES. Compressor with 4 steps:
oA1 = CPr1; **oA2** = StP; **oA3** = StP; **oA4** = StP; **CtyP** = Scr

a. Activation with valves ON due to voltage presence (StP=cL).

	oA1 = Screw1	**oA2 = StP**	**oA3 = StP**	**oA4 = StP**
Step 1 (25%)	*ON*	*ON*	*OFF*	*OFF*
Step 2 (50%)	*ON*	*OFF*	*ON*	*OFF*
Step 3 (75%)	*ON*	*OFF*	*OFF*	*ON*
Step 4 (100%)	*ON*	*OFF*	*OFF*	*OFF*

b. Activation with valves ON due to voltage absence (StP=oP).

	C1 = Screw1	**C2 = stp**	**C3 = stp**	**C4 = stp**
Step 1 (25%)	*ON*	*OFF*	*ON*	*ON*
Step 2 (50%)	*ON*	*ON*	*OFF*	*ON*
Step 3 (75%)	*ON*	*ON*	*ON*	*OFF*
Step 4 (100%)	*ON*	*ON*	*ON*	*ON*

21. Fan regulation

The fan regulation band **Pb** is divided by the number of fans:

The numbers of fans switched ON is proportional to the value of the input signal: when this distances itself from the target set point and enters the various bands, the fans are switched ON, to be then turned OFF when the signal brings near the set point.

In this way if the pressure is greater than regulation band, all the fans are on, if the pressure (temperature) is lower than the regulation band all the fans are off.
Naturally also for this regulations all the delays (Fon and FoF) are valid.

Regulation according to the running hours
The algorithm switch on and off the loads according to the running hours of each load. In this way the running hours are balanced.
Example

4 Fans: **oA2 =FAn; oA3 = FAn; oA4 = FAn; oA6 = FAn:**
rot = yES rotation enabled

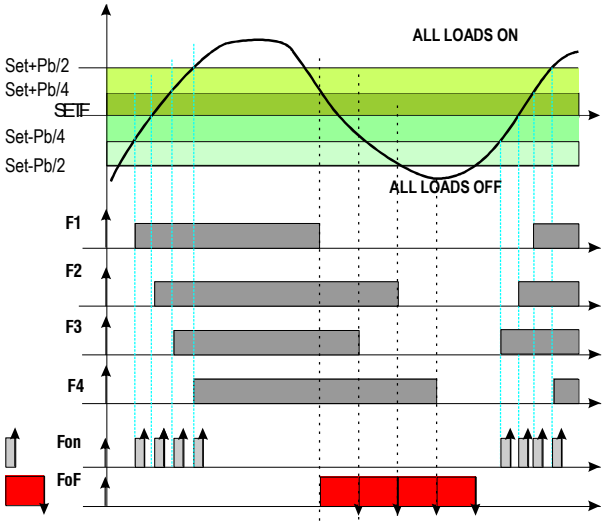

21.1 Condenser with Inverter or Eci Fans–Analog Output Setting

This configuration is used when all fans of the condensing group are ECI fans or driven by one inverter or a chopped phase driver.
The capacity used by the inverter is proportional to the delivery pressure value inside the regulation band (SETF-Pb/2÷ SETF+Pb/2.

21.1.1 Condenser fan configurations and Parameters

Parameter	Description	Action
oA(i) = inF	Set 1 relay for inverter	One relay is used to enable the action of the inverter.
AoC = tEn	Analog output setting	Set the output as 0-10V
AoF = InF	Analog output function	Set the output to drive ECI or inverter fan
AOM =0	Minimum value for analog output	The minimum voltage is 0V. **NOTE**: verify on the inverter of ECI fan of chopped phase driver that with this input a proper output is supplied to the fan.
AOt = 5	Time of analog output at max after the start	To start the fan the controller supplies 10V output for 5s, then starts standard regulation
MPM = 100	Maximum % variation per minute	The analog output takes 1 min to move from the min to the maximum

21.1.2 How to set it

Parameters involved: oA(i) = inF; AoC = tEn, AoF = InF, Aot = 0, AOM = 30, MPM = 100

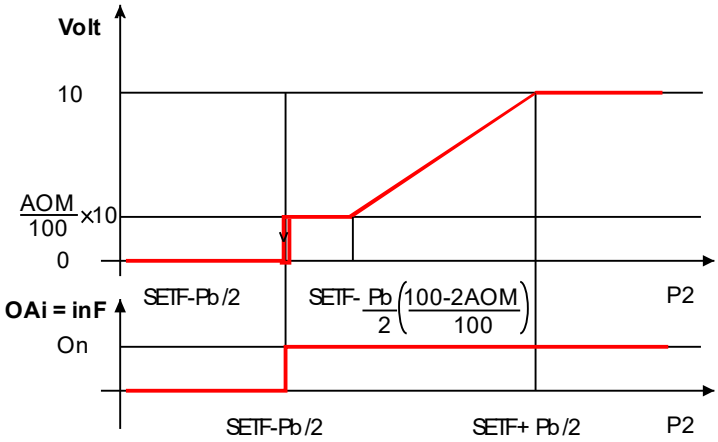

a. If required, set a relay to drive the invert (is used to signal to the inverter to start and stop the regulation), by setting: **oA(i) = inF** inverter for fans

b. Set the kind of signal of the analog output current (4-20ma) or voltage (0-10V) by the **Analog output setting** parameter "**AoC": tEn =** 0÷10V output; **cUr =** 4-20mA output

c. Set the function of the analog output: **AoF = InF**

d. Set the time of the analog output at max after start up EI: Aot = 3s

e. Set the max % variation per min (MP)

f. At last set also the percentage of analog output in case of probe failure**:** (0 ÷ 100%)**SAO**

21.2 Analog output "free"

This setting is used to link the analog output 1 to a temperature probe. The analog output will take values proportional to the temperatures detected by the probe P3 or P4, according to the setting.

21.2.1 Analog output "free" configurations and Parameters

Parameter	Description	Action
AoC = tEn	Analog output setting	Set the output as 0-10V
AoF = FrE	Analog output function	Set the output to drive for instance a de-superheater
AOP = P3	Reference probe for the analog output 1 (used only if AOP=FrE)	It's possible to set only P3 or P4 probes. P3 must be set as temperature probe: P3C = ntc (NTC 10K) or nt86 (NTC 86K)
LAO = 20	Temperature value associated to minimum value of analog output AOM.	It's the start scale of the analog output
UAO = 40	Temperature value associated to the maximum value of analog output (10V)	It's the end scale of the analog output
AOM =0	Minimum value for analog output	The minimum voltage is 0V.

Parameter	Description	Action
		NOTE: verify on the inverter of ECI fan of chopped phase driver that with this input a proper output is supplied to the fan.
AOt = 5	Time of analog output at max after the start	With AOt = 5 the controller supplies 10V output for 5s at fan start, then starts standard regulation
MPM = 100	Maximum % variation per minute	The analog output takes 1 min to move from the min to the maximum

21.2.2 How to set it

Parameters involved: AoC = tEn, AoF = FrE, AOP = P3: LAO = 20; UAO = 40; Aot = 0, AOM = 30, MPM = 100

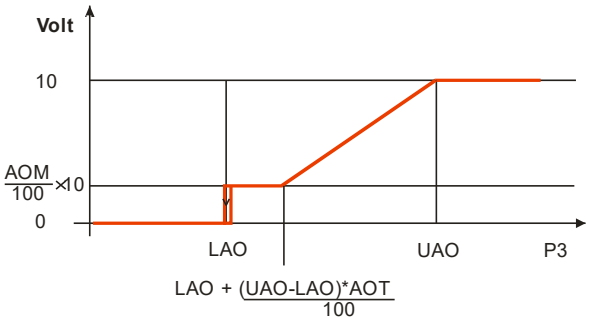

a. Set the kind of signal of the analog output current (4-20ma) or voltage (0-10V) by the **Analog output setting** parameter "**AoC": tEn =** 0÷10V output; **cUr =** 4-20mA output

b. Set the function of the analog output: **AoF = FrE**

c. **Set the time of the analog output at max after start up EI: Aot = 3s**

d. **Set the start scale temperature by LAO parameter, at which correspond the AOM value of analog output**

e. **Set the end scale temperature by UAO parameter, at which correspond the maximum value of analog output**

f. **Set the max % variation per min (MPM)**

g. At last set also the percentage of analog output in case of probe failure**:** (0 ÷ 100%)**SAO**

22. Additional functions

22.1 Compressor running proof function

The digital inputs are normally used to signal a compressor or fan failure
It's also possible to set the digital inputs for running proof signalling. That means when compressor relay is activated, after a configurable delay the digital input related to the compressor should goes on too (usually a contact from compressor contactor) and the controller has the "confirmation" that compressor is running.
If it doesn't, that means something is wrong between the controller and the compressor itself.

22.1.1 Parameters and settings

The parameters involved are:
- **iF01, iF02, iF03, iF04, iF05, iF06, iF07, iF08**: configuration of dig input 1, 2, 3, 4, 5, 6, 7, 8

with the related polarity:
- **iP01, iP02, iP03, iP04, iP05, iP06, iP07, iP08:** polarity of digital input 1, 2, 3, 4, 5, 6, 7, 8

with the related delay before alarm signalling:
- **d1d, d2d, d3d, d4d, d5d, d6d:** delay before signalling alarm with digital input set respectively as **oA1 or Co1, oA2 or Co2, oA3 or Co3, oA4 or Co4, oA5 or Co5, oA6 or Co6.**

22.1.2 Alarms related

Label	Meaning	Reaason	Action	Reset
FC01… FC06	**Running proof alarm with automatic recover**	The digital input set as Co1.. Co6 has not been activated by d1d, … d4d time	The compressor 1..4 is switched off and the safety timers start	Automatic – when safety timers are over
LC01… LC06	**Running proof alarm with manual recover**	5 running proof alarms happened in a hour.	The compressor 1..4 is switched off	Manual by means: - Controller off-on - Reset by keyboard - Reset by monitoring system

22.1.3 Example

EI: Rack with 2 compressors, with compressor safeties and running proof circuit for each compressor:
Compressor 1 on relay 1**: oA1 = CPr1**
Compressor 2 on relay 2**: oA2 = CPr1**
Safety for compressor 1 on digital input 1**: iF01 = oA1**
Safety for compressor 2 on digital input 2**: iF02 = oA2**
Running proof circuit for compressor 1 on digital input 3**: iF03 = Co1**
Running proof circuit for compressor 2 on digital input 4**: iF04 = Co2**
2 seconds delay before signalling alarm and stopping the compressor 1: **d1d = 2**
2 seconds delay before signalling alarm and stopping the compressor 2: **d2d = 2**

When the compressor 1 (or 2) starts, if by 2sec the digital input 3 (or 4) is not activated (running proof function) the **FC01** alarm is signalled and the compressor is stopped.

Alarm recover as soon as the safety timers of the compressor (onon, ofon) are over and compressor come back available for regulation.
After 5 consecutive alarms, the alarms move from automatic restart to manual restart and it must be reset by Keyboard, of by switching off and on the controller.

22.2 Flood protection function

To ensure the maximum safety of the plant, a relay is activated when the compressors can't be switched on since they are blocked due to safety times or for other issues or stopped for maintenance.
This output can be used to block the liquid injection to the cabinets to avoid to flood the suction collectors.
The relay will be disabled once the compressors can restart (see scheme 1).

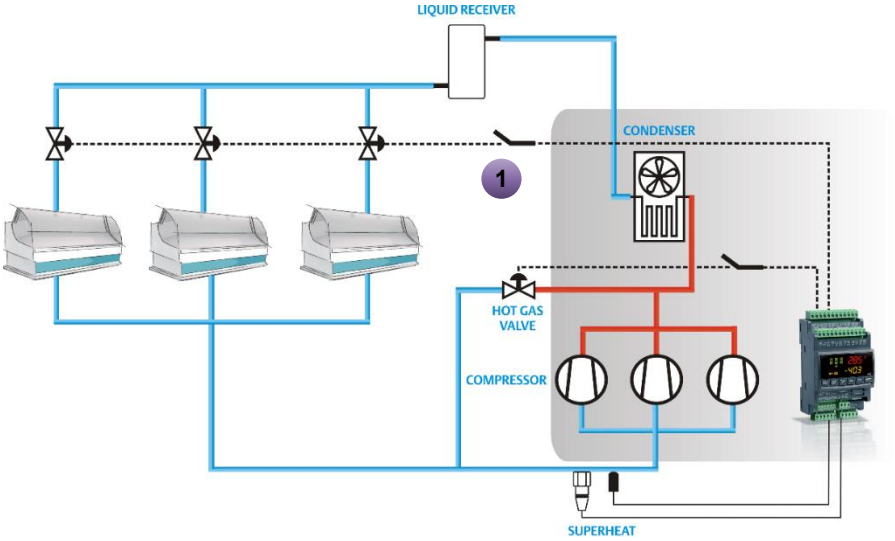

To enable this function set one relay by the parameters **oA2** or **oA3** or **oA4** or **oA5** or **oA6**, as flood protection, El **oA4 = Liq,** and then connect it to the external device that blocks the cabinet injection.
NOTE: the relay set as flood protection is automatically activated even when the controller is in stand-by mode.

NOTE
If the compressors are activated in fix sequence, (Sty = no), and the compressor that has to be activated is locked by safety timers, the relay set as flood protection is switched on till the safety timers are over.

22.3 Suction superheat monitoring

Controller can monitor the suction superheat, and signal situations of low superheat, with a pre-alarm and alarm thresholds.
According to the settings, compressors can be stopped in case of low superheat alarm, to preserve compressor integrity.

22.3.1 Suction Superheat detecting

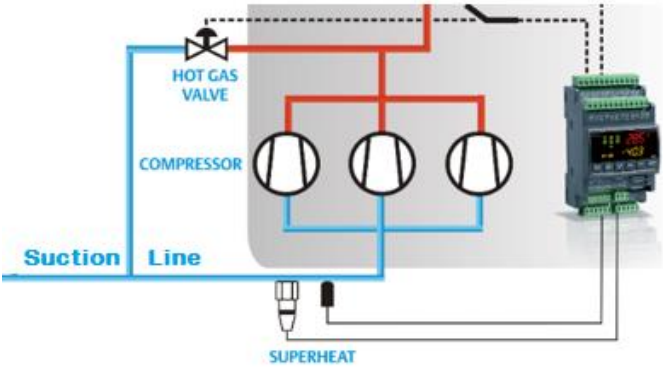

To detect the suction superheat an auxiliary probe among P3 (term. 38-42) or P4 (term. 22-23) has to be set as superheat temperature probe.
To do this set ASH9 = P3 or P4.
Controller automatically calculates the suction superheat using the value of the suction probe P1 and the probe set in the parameter ASH9.
The SH is available after 1 minute since at least one compressor is running.

22.3.2 Low superheat signalling and actions

Controller can signal low superheat pre-alarm, only warning, and low superheat alarm, warning and regulation according to parameter ASH4.

The alarm messages and the regulation are described in the following table

Label	Meaning	Cause	Action	Recovery
PrSH	**Low superheat Pre-allarm**	The superheat is less than: SH< ASH2 + ASH0 for ASH1 time	Only warning	**Automatic:** when superheat: SH>ASH0+ASH2+1°C(2°F)
ALSH	**Low superheat allarm**	The superheat is less than: SH< ASH2 for ASH3 time	Regulation depends on ASH4: ASH4 = no: regulation not affected. ASH4 = yes: regulation is stopped.	**Automatic:** when superheat: SH> ASH5 + ASH2

22.4 Hot gas injection valve

Controller can manage a hot gas injection valve to increase suction superheat. See above figure.

22.4.1 Parameters

A **relay** must be set as hot gas valve: **oA2** or **oA3** or **oA4** or **oA5** or **oA6**= HGi, and
an **auxiliary probe** among P3 (term. 38-42) or P4 (term. 22-23) has to be set as superheat temperature probe **ASH9 = P3 or P4**.
Then the following parameters:
ASH7 Superheat value to enable hot gas injecting valve (0.1 to 15.0°C/ 1 to 30°F)
ASH8 Differential for ASH7 (0.1 to 30.0°C/ 1 to 60°F)

22.4.2 Regulation:

The regulation respects the following schema:

Superheat < ASH7 – ASH8	→	HGi on
Superheat > ASH7	→	HGi off
ASH7 < Superheat < ASH7 – ASH8	→	Status.

Dove SH = valore di SH

22.4.3 Special conditions

a. With **ASH9 = nP**: none probe set as SH probe and one relays set as HGi (valve for hot gas injection) the configuration error is displayed "**no Probe For SH**", and the relay set as HGi is never activated..
b. If the probe used to calculate the SH is in error the related probe fault alarm is generated (P3 or P4) and the HGi relay is not activated.

23. Alarm list

Usually alarm conditions are signaled by means of:
1. Activation of alarm output
2. Buzzer activation
3. Message on proper display
4. Log of alarm: code and duration.

The table at paragraph 23.3

23.1 Types of alarms and signaling managed

23.1.1 A12: Configuration alarm

The following configuration parameters are checked after each modification.:

OA1÷ OA6	Outputs 2- 6 configuration
P2C	Second probe configuration.

When these parameters are set in wrong way an alarm message is generated:
the label **A12** is shown on the upper display, while the lower display the following messages are shown:

Mess.	Errata	Corrige
Too Many dGS output	More than one oAi has been set as dGs (digital scroll)	• Check the oAi parameters and set them different from dGS.
Too Many dGSt output	One oAi has been set as dGst (triac for digital scroll)	• Check the oAi parameters and set them different from dGSt.
Too Many 6dG output	More than one oAi has been set as 6dG (triac for digital scroll)	• Check the oAi parameters and set them different from 6dG.
6dG bEForE dGS ConFig Error	oAi configured as 6dG before the dGS	• Check the oAi parameters and set 6dG after dGS.
dGSt OutPut Error	One oAi has been set as dGst (triac for digital scroll)	• Check the oAi parameters and set them different from dGSt.
dGS not PrESEnt	One oAi has been set as dGs (digital scroll)	• Check the oAi parameters and set them different from dGS.
dGSt not PrESEnt	The digital output for digital compressor has not be set	• Check the oAi parameters and set them different from dGS or 6dG.
StEP ConFiG Error	Load (step) configuration error	• A relay oA(i) has been set as compressor without a previous relay oA(i-1) has been set as compressor. EI oA1 = StP
Fan ProbE not PrESEnt	None probe has been set for to manage the fan	Check parameters **FPb , P1C , P2C , P3C**, and then set a probe for this function
No P3 ProbE For Lin out	None probe has been set for the Liquid Injection function	Check parameters **LiPr , P3C , P4C**, and then set a probe for this function.
no LoAdS For rEGuLAtion	None oA(i) is set as compressors or fans	• Check the setting of oA1,oA2, oA3, oA4,oA5, oA6 parameters
ProbE tyPE For dynAMic Set	A current of voltage transducer has been set for the “Dynamic set point for fan” function	• Set a temperature probe for the “Dynamic set point for fan” function, par. “**dSEP**”
No ProbE For dynAMic Set	None probe has been set for the “Dynamic set point for fan” function	• Set a temperature probe for the “Dynamic set point for fan” function, par. “**dSEP**”.
too MAnY InC1	More than one oAi has been set as inC1 (inverter for suction 1)	• Check the oAi parameters and set only 1 as “inC1”.
No AnALoGuE out For InC1	None analogue output has been set as “inC1”	• Check AoF and 2AoF and set one of them as “inC1”
too MAnY InC2	More than one oAi has been set as inC2 (inverter for suction 2)	• Check the oAi parameters and set only 1 as “inC2”.
No AnALoGuE out For InC2	None analogue output has been set as “inC2”	• Check AoF and 2AoF and set one of them as “inC2”
too MAnY InF	More than one oAi has been set as inF (inverter for fan)	• Check the oAi parameters and set only 1 as “inF”.

Mess.	Errata	Corrige
No AnALoGuE out For InF	None anlogue output has been set as “inF”	• Check AoF and 2AoF and set one of them as “inF”
CPr Circuit conFiG Error	The kind of outputs are not compatible with the 2 suction circuits	• Check parameters **oA(i) , CtyP and set CtyP different from Scr**.
AO1 And AO2 SAME Function	AoF and 2AoF have the same setting	• Set AoF and 2AoF properly.
no Probe For SH	One relay is set as hot gas injection valve (oA2 or oA3 or oA4 = HGi), but the probe to detected th superheat is missed: **ASH9 = nP**	• Set a probe to detect the superheat by the parameter ASH9 = P3 or P4. • If the hot gas injection valve is not present, set oA2 or oA3 or oA4 different from HGi.

23.1.2 E01L, E02L Electronic Pressure switch alarm, suction 1 and 2 sections

Parameters
ELP (2ELP): Electronic pressure switch threshold, section 1 (and 2): (-50°C÷SETC; -58°F÷SETC; PA04÷SETC); Pressure / Temperature value at which all the compressors are switched off. It has to be set some degrees above the mechanical low pressure switch value, in order to prevent mechanical low pressure activation.

Actions
Electronic low pressure: every time the suction temperature/pressure is less than ELP value all the compressors are switched off. The instrument restarts the standard operating mode when pressure/ temperature increases.

23.1.3 E0H1, E0L1, Pressure switch alarm, suction 1, and condensing sections

Terminals
WARNING: THESE TERMINALS REQUIRE MAIN VOLTAGE CONNECTION
Low pressure switch 1 input: 44-45, high pressure switch input: **[45-46].**

Parameters
iP10: Low pressure switch polarity: It establishes if the input is activated by giving (iP10=cL) or by removing (iP10=oP) main voltage to the terminals.
iP09: High pressure switch polarity: It establishes if the input is by giving (iP09=cL) or by removing (iP09=oP) main voltage to the terminals.

Actions
Low pressure: every time the inputs are activated all the compressors are switched off. The instrument restart the standard operating mode when the input is disabled. If there are PEn activation in the PEi time, only manual resetting is allowed, by pressing the **DOWN** key for 3s or by turning off and on the instrument.
High pressure: every time the inputs are activated all the compressors are switched off and fans are switched on. The instrument restart the standard operating mode when the input is disabled. If there are PnF activation in the PiF time, only manual resetting is allowed, by pressing the **DOWN** key for 3s or by turning off and on the instrument.

23.1.4 E0L2, Pressure switch alarm, suction 2

Terminals
WARNING: THESE TERMINALS FREE VOLTAGE CONNECTION
Set iF07 or iF08 as low pressure switch 2 input: 44-45, high pressure switch input: ***[45-46].***

Parameters
iP10: Low pressure switch polarity: *It establishes if the input is activated by giving (iP10=cL) or by removing (iP10=oP) main voltage to the terminals.*
iP09: High pressure switch polarity: *It establishes if the input is by giving (iP09=cL) or by removing (iP09=oP) main voltage to the terminals.*

Actions
Low pressure: *every time the inputs are activated all the compressors are switched off. The instrument restart the standard operating mode when the input is disabled. If there are PEn activation in the PEi time, only manual resetting is allowed, by pressing the* ***DOWN*** *key for 3s or by turning off and on the instrument.*
High pressure: *every time the inputs are activated all the compressors are switched off and fans are switched on. The instrument restart the standard operating mode when the input is disabled. If there are PnF activation in the PiF time, only manual resetting is allowed, by pressing the* ***DOWN*** *key for 3s or by turning off and on the instrument.*

23.1.5 EA1÷EA6: Compressors and fans safeties alarm.

Terminals
WARNING: THESE TERMINALS REQUIRE A FREE OF VOLTAGE CONNECTION.
The terminals (from 13 TO 18) really used depends on the number of loads. The protections regarding the compressors and fans are connected to these inputs. If one of these protections is enabling (E.I. for lack of oil or overheating, etc,) the corresponding load is turn off.

Parameters
iP01, iP02, iP03, iP04, iP05, iP06: establish if the input is activated by closing (cL) or by opening (=oP) the terminals.

Actions
Every time one input is activated the corresponding output is turned off.

Recovery
Recovery depends on **ALMr** parameter:
With **ALMr** = **no** The instrument restart the standard operating mode when the input is disabled.
With **ALMr** = **yES** manual recover for the alarms of compressors and fans. Push the **DOWN** key for 3s.

23.1.6 P1, P2; P3,P4: probe failure alarm

It is generated by failure in the probe P1, P2 , P3 or P4.

In case of **P1** fault, number of steps engaged depends on the **SPr** parameter
In case of **P2** fault, number of fans engaged depends on the FPr parameter

If the P3 or P4 probes are used for dynamic set point
The function is disabled and only the standard set point is used.

Recovery
Automatic as soon as probe restarts working.

23.1.7 C1HA, C1LA, C2HA, C2LA F-HA, F-LA High and low pressure (temperature) alarms for compressors or fans

This alarm signals that the pressure (temperature) is out of limits established by parameters LAL and HAL for compressors and LAF –HAF for fans.
The **tAo** and **AFd** parameters set the delay between alarm condition and alarm signaling.

Action
The alarm is signaled with standard action. The outputs are unchanged.

23.2 Buzzer muting

Press any buttons to silence the buzzer during an alarm condition.
Hold pressed for more than 3 seconds switch off the alarm relay during an alarm condition

23.3 Alarm conditions – summary table

Code	Description	Cause	Action	Reset
E01L (E02L)	**Low electronic pressure-switch alarm, suction 1 (suction 2)**	Pressure/temperature less than ELP(ELP2) value	All compressors of the circuit 1 (2) are turned off. Fans unchanged.	**Automatically when** the pressure/temperature increases more than ELP (ELP2) value
E0L1 (E0L2)	**Low pressure-switch alarm, suction 1 (suction 2)**	Low pressure switch input of circuit 1 (2) enabled	All compressors of the circuit 1 (2) are turned off. Fans unchanged.	**Automatically** (if the number of activation are less than PEn in the PEi time) when the input is disable. - The compressors restarts working according to the working algorithm. **Manually** (if PEn activation happened in the PEi time) When the input is disable: a. hold pressed the **Restart**(DOWN)key for 3s or b. turn off and on the instrument.. - The compressors restarts working according to the working algorithm.
E0H	**High pressure switch alarm**	High pressure switch input enabled	- All compressors are turned off. - All fans are turned on.	**Automatically** (if the number of activation are less than PEn in the PEi time) when the input is disable. - Compressors and fans restart working according to the working algorithm. **Manually** (if PEn activation happened in the PEi time) When the input is disable: - hold pressed the **Restart**(DOWN) key for 3s or - turn off and on the instrument. Compressors and fans restarts working according to the working algorithm.

Code	Description	Cause	Action	Reset
P1	**P1 probe failure alarm**	Probe failure or out of range	– The compressors are activated according to the SPr or PoPr parameters.	**Automatically** as soon as the probe restarts working.
P2	**P2 probe failure alarm**	Probe failure or out of range	– The fans are activated according to the FPr parameters.	**Automatically** as soon as the probe restarts working.
P3	**P3 probe failure alarm**	Probe 3 failure or out of range	– With P3 used for circuit 2, the compressors are activated according to the 2SPr. – The functions related to the third probe are disabled.	**Automatically** as soon as the probe restarts working.
P4	**P4 probe failure alarm**	Probe 4 failure or out of range	– The functions related to the fourth probe are disabled.	**Automatically** as soon as the probe restarts working.
P5	**P5 probe failure alarm**	Probe 5 failure or out of range	– The functions related to the fifth probe are disabled.	**Automatically** as soon as the probe restarts working.
EA1 **EA2** **EA3** **EA4** **EA5** **EA6**	**Load safeties alarm**	Safeties compressor/fan input activation. NOTE: with step compressors 1 input for each compressor has to be used.	– the corresponding load is turned off. (with step compressors all relays referred to the input are disabled).	Recovery depends on **ALMr** parameter: With **ALMr** = **no** The instrument restart the standard operating mode when the input is disabled. With **ALMr** = **yES** manual recover for the alarms of compressors and fans. Push the **DOWN** key for 3s.
C1-LA	**Minimum pressure (temperature) alarm compressors section**	Suction pressure or temperature lower than LAL value	signaling only	**Automatically:** as soon as the pressure or temperature reaches the (LAL+ differential) value. (differential = 0.3bar or 1°C)
F-LA	**Minimum pressure (temperature) alarm fans section**	Condensing pressure or temperature lower than LAF value	signaling only	**Automatically:** as soon as the pressure or temperature reaches the (LAF+ differential) value. (differential = 0.3bar or 1°C)

Code	Description	Cause	Action	Reset
C1-HA	**Maximum pressure (temperature) alarm compressors section**	Suction pressure or temperature higher than HAL value	signaling only	**Automatically:** as soon as the pressure or temperature reaches the (HAL - differential) value. (differential = 0.3bar or 1°C)
F-HA	**Maximum pressure (temperature) alarm fans section**	Condensing pressure or temperature higher than HAF value	Depends on the parameter HFC	**Automatically:** as soon as the pressure or temperature reaches the (HAF - differential) value. (differential = 0.3bar or 1°C)
A5	**Liquid level alarm**	Input enabled	signaling only	**Automatically** as soon as the input is disabled
A12	**Configuration alarms**	See par. 18.1	–	
A14	**Load maintenance alarm**	A load has worked for the hour set in the SEr parameter	- signaling only	**Manually:** reset the running hour of the compressor (see par.**13 Running** hours of loads)
EA	**External alarm**	The configurable dig. Input set as EA is activated	signaling only	**Automatically** as soon as the input is disabled
InF	**Inverter fan alarm**	The configurable dig. Input set as inF is activated	The analog out set as INF is switched off	**Automatically** as soon as the input is disabled
FC01 … FC06	**Running proof alarm with automatic recover**	The digital input set as Co1.. Co6 has not been activated by d1d, … d4d time	The compressor 1..4 is switched off and the safety timers start	Automatic – when safety timers are over
LC01 … LC06	**Running proof alarm with manual recover**	5 running proof alarms happened in a hour.	The compressor 1..4 is switched off	Manual by means: - Controller off-on - Reset by keyboard - Reset by monitoring system
PrSH	**Low superheat Pre-allarm**	The superheat is less than: SH< ASH2 + ASH0 for ASH1 time	Only warning	**Automatic:** when superheat: SH>ASH0+ASH2+1°C(2°F)
ALSH	**Low superheat allarm**	The superheat is less than: SH< ASH2 for ASH3 time	Regulation depends on ASH4: **ASH4 = no**: regulation not affected. **ASH4 = yes**: regulation is stopped.	**Automatic:** when superheat: SH> ASH5 + ASH2

24. Technical features

XC660D

Housing: Self extinguishing PC/PC+ABS.
Case: 4 DIN modules 70x135mm with male and female connectors; depth 60mm.
Mounting: DIN RAIL mounting device in an omega (3) din rail.
Degree of protection: Indoor use only, Open type enclosure (NEMA - UL 50e); IP20 (EN 60529)
Power supply: 230Vac ±10%. 50-60Hz, or 115Vac ±10%. 50-60Hz or 24Vac ±10%. 50-60Hz.
Overvoltage Category: II.
Rated power: 6VA max.
Rated Impulse Voltage: 4000V.
Display: 4 digits red led and 4 digit orange led.
Software class: A.
Terminal connections: pluggable screw terminal block ≤ 2.5 mm^2 wiring. Max closing torque 0,5Nm
Data storing: on the non-volatile memory (EEPROM).
Type of action: 1B.
Pollution degree: 2.
Ambient Operating temperature: -10T60 °C.
Shipping and storage temperature: -40T85 °C.
Relative humidity: 20÷85% (no condensing).
Measuring range: NTC 10K probe: -40÷110°C.
Resolution: 0,1 °C; 1°F; 0.1bar; 1 PSI.
Accuracy (ambient temp. 25°C): ±0,7 °C ±1 digit.
Inputs: up to 4 NTC probes, or up to 3 4÷20mA or up to 0.5÷4.5Vdc transducer.
Digital inputs: up to 8 free voltage, max cable length 10m, 2 inputs main voltage.
Relay outputs: 6 relay SPST, Rating according to the UL60730
Resistive 3A, 240VAC 50K cycles
Inductive (G.P.) 3A, 240VAC 30K cycles
Motor Load 240VAC, 1/8 hp (1.9FLA/11.4LRA), 30K cycles
Pilot Duty 180VA, 240VAC 30K cycles
Maximum ampacity: 12A Plug-in terminal block, 14A other types.
Analogue output: 2 x 4÷20mA or 0÷10V, , SELV, Limited Energy circuit <15W.
Analogue output accuracy: 3% full scale.
Serial output: RS485 standard; **Communication protocol:** ModBus – RTU.
Purpose of control: operating control.
Construction of control: incorporated control, intended to be used in Class I or Class II equipment.

VC660 keyboard

Housing: self extinguishing ABS.
Dimensions: fascia 64x164 mm; depth 23mm.
Mounting: Panel mounting device in a 56x72 mm panel cut-out with two screws. ∅ 3x2mm. Distance between the holes 40mm.
Degree of protection: Indoor use only, **Front Panel**: Type 1 enclosure (NEMA - UL 50e), IP65 (EN 60529); **Rear panel**: IP20 (EN 60529).
Power supply: from **XC660D** power module, 12V, 100mA max, SELV, Limited Energy circuit <15W.
Overvoltage Category: II.
Display: 4 digits red led and 4 digit orange led.
Optional output: buzzer.
Type of action: 1B.
Pollution degree: 2.
Ambient Operating temperature: -10T60 °C.
Shipping and storage temperature: -40T85 °C.
Purpose of control: operating control.

Construction of control: incorporated control.

25. Parameters – Default values

Label	Valori	Menù	Descrizione Parametri	Limiti
StC1	-10.0	Pr1	Set point for compressors	LSE÷HSE
StC2	-30.0	Pr1	Set point for compressors circit 2	2LSE÷2HSE
SEtF	35.0	Pr1	Set point for fans	LSF÷HSF
OA1	CPr1	Pr2	Load 1 configuration	nu - CPr1 - CPr2 - StP - dGS - 6dG - dGSt - InC1 - InC2 - FAn - InF - LIn – ALr – Liq - HGi
OA2	CPr1	Pr2	Load 2 configuration	nu - CPr1 - CPr2 - StP - dGS - 6dG - dGSt - InC1 - InC2 - FAn - InF - LIn – ALr – Liq - HGi
OA3	CPr1	Pr2	Load 3 configuration	nu - CPr1 - CPr2 - StP - dGS - 6dG - dGSt - InC1 - InC2 - FAn - InF - LIn – ALr – Liq - HGi
OA4	FAn	Pr2	Load 4 configuration	nu - CPr1 - CPr2 - StP - dGS - 6dG - dGSt - InC1 - InC2 - FAn - InF - LIn – ALr – Liq - HGi
OA5	FAn	Pr2	Load 5 configuration	nu - CPr1 - CPr2 - StP - dGS - 6dG - dGSt - InC1 - InC2 - FAn - InF - LIn – ALr – Liq - HGi
OA6	FAn	Pr2	Load 6 configuration	nu - CPr1 - CPr2 - StP - dGS - 6dG - dGSt - InC1 - InC2 - FAn - InF - LIn – ALr – Liq - HGi
CtyP	SPo	Pr2	Compressor type	SPo, dPo, Scr
StP	OP	Pr2	Valve output polarity	OP - CL
PC1	20	Pr2	Capacity of compressor 1	0÷100
PC2	20	Pr2	Capacity of compressor 2	0÷100
PC3	20	Pr2	Capacity of compressor 3	0÷100
PC4	20	Pr2	Capacity of compressor 4	0÷100
PC5	20	Pr2	Capacity of compressor 5	0÷100
PC6	20	Pr2	Capacity of compressor 6	0÷100
FtyP	r448	Pr2	Refrigerant gas type	r22= r22; r32 = r32; r134=r134, r290 = r290; r404=R404A; 407A = r407A; 407C= r407C; 407F= r407F; 410= r410; r448 = r448A; r449 = r449A, r450 = r450A; r452 = r452A; 507=R507; r513=R513; 14EE= r1234ze; CO2= CO2; 515b (*) = r515b; 454A (*)= R454A; 454b (*)= R454B; 454C (*)= R454B; 455A (*)= R455A; 14YF (*)= R1234ze (*) Present only in 3.5h or following release
Sty	YES	Pr2	Compressor Sequence type	no - yES
Rot	YES	Pr2	Fan Sequence type	no - yES
P1C	Cur	Pr2	P1 probe setting (4/20mA, 0-5V, ntc)	nP - Cur - tEn - ntc
PA04	-0.5	Pr2	4mA or 0.5V readout for P1 probe	(-1.0 ÷ PA20)BAR; (-15 ÷ PA20)PSI; (-100 ÷ PA20)KPA
PA20	11.0	Pr2	20mA or 4.5V readout for P1 probe	(PA04 ÷ 61.0)BAR; (PA04 ÷ 885)PSI; (PA04 ÷ 6100)KPA
CAL	0.0	Pr2	P1 probe offset	-12.0÷12.0(°C); -20÷20 (°F); 12.0÷12.0 (bar); - 200÷200 (PSI) -999÷999 (kPA)
P2C	Cur	Pr2	P2 probe setting (4/20mA, 0-5V, ntc)	nP - Cur - tEn - ntc
FA04	0.0	Pr2	4mA or 0.5V readout for P2 probe	(-1.0 ÷ FA20)BAR; (-15 ÷ FA20)PSI; (-100 ÷ FA20)KPA

Label	Valori	Menù	Descrizione Parametri	Limiti
FA20	30.0	Pr2	20mA or 4.5V readout for P2 probe	(FA04 ÷ 61.0)BAR; (FA04 ÷ 885)PSI; (FA04 ÷ 6100)KPA
FCAL	0.0	Pr2	P2 probe offset	-12.0÷12.0(°C); -20÷20 (°F); 12.0÷12.0 (bar); - 200÷200 (PSI) -999÷999 (kPA)
P3C	nP	Pr2	P3 probe setting (4/20mA, 0-5V, ntc)	nP - Cur - tEn - ntc - nt86
3P04	-0.5	Pr2	4mA or 0.5V readout for P3 probe	(-1.0 ÷ FA20)BAR; (-15 ÷ FA20)PSI; (-100 ÷ FA20)KPA
3P20	11.0	Pr2	20mA or 4.5V readout for P3 probe	(3P04 ÷ 61.0)BAR; (3P04 ÷ 885)PSI; (3P04 ÷ 6100)KPA
O3	0.0	Pr2	P3 probe offset	-12.0÷12.0(°C); -20÷20 (°F); 12.0÷12.0 (bar); - 200÷200 (PSI) -999÷999 (kPA)
P4C	nP	Pr2	P4 probe setting (NTC 10K, NTC 86K, NTC10K-150°C)	nP - ntc - nt86 - ntcH
O4	0.0	Pr2	P4 probe offset	-12.0÷12.0(°C); -20÷20 (°F)
P5C	nP	Pr2	P5 probe setting (NTC 10K, NTC 86K, NTC10K-150°C)	nP - ntc - nt86 - ntcH
O5	0.0	Pr2	P5 probe offset	-12.0÷12.0(°C); -20÷20 (°F)
2CPb	nP	Pr2	Probe selection for second suction circuit	nP - P1 - P2 - P3
FPb	P2	Pr2	Probe setting for fan	nP - P1 - P2 - P3
iF01	OA1	Pr2	Configurable digital input 1 function (terminals 13-14)	nu - OA1- OA2 - OA3 - OA4 - OA5 - OA6 - InF - LP1 - LP2 - HP - ES - OFF - LL - SIL – EAL – Co1 – Co2 – Co3 – Co4 – Co5 – Co6
iF02	OA2	Pr2	Configurable digital input 2 function (terminals 13-15)	nu - OA1- OA2 - OA3 - OA4 - OA5 - OA6 - InF - LP1 - LP2 - HP - ES - OFF - LL - SIL – EAL – Co1 – Co2 – Co3 – Co4 – Co5 – Co6
iF03	OA3	Pr2	Configurable digital input 3 function (terminals 16-17)	nu - OA1- OA2 - OA3 - OA4 - OA5 - OA6 - InF - LP1 - LP2 - HP - ES - OFF - LL - SIL – EAL – Co1 – Co2 – Co3 – Co4 – Co5 – Co6
iF04	OA4	Pr2	Configurable digital input 4 function (terminals 16-18)	nu - OA1- OA2 - OA3 - OA4 - OA5 - OA6 - InF - LP1 - LP2 - HP - ES - OFF - LL - SIL – EAL – Co1 – Co2 – Co3 – Co4 – Co5 – Co6
iF05	OA5	Pr2	Configurable digital input 5 function (terminals 19-20)	nu - OA1- OA2 - OA3 - OA4 - OA5 - OA6 - InF - LP1 - LP2 - HP - ES - OFF - LL - SIL – EAL – Co1 – Co2 – Co3 – Co4 – Co5 – Co6
iF06	OA6	Pr2	Configurable digital input 6function (terminals 19-21)	nu - OA1- OA2 - OA3 - OA4 - OA5 - OA6 - InF - LP1 - LP2 - HP - ES - OFF - LL - SIL – EAL – Co1 – Co2 – Co3 – Co4 – Co5 – Co6
iF07	ES	Pr2	Configurable digital input 7 function (terminals 22-23)	nu - OA1- OA2 - OA3 - OA4 - OA5 - OA6 - InF - LP1 - LP2 - HP - ES - OFF - LL - SIL – EAL – Co1 – Co2 – Co3 – Co4 – Co5 – Co6
iF08	LL	Pr2	Configurable digital input 8 function (terminals 22-24):	nu - OA1- OA2 - OA3 - OA4 - OA5 - OA6 - InF - LP1 - LP2 - HP - ES - OFF - LL - SIL – EAL – Co1 – Co2 – Co3 – Co4 – Co5 – Co6
iP01	cL	Pr2	Safety input for Load 1 polarity (13-14):	OP - CL
iP02	cL	Pr2	Safety input for Load 2 polarity (13-15):	OP - CL
iP03	cL	Pr2	Safety input for Load 3 polarity (16-17):	OP - CL
iP04	cL	Pr2	Safety input for Load 4 polarity (16-18):	OP - CL
iP05	cL	Pr2	Safety input for Load 5 polarity (19-20):	OP - CL
iP06	cL	Pr2	Safety input for Load 6 polarity (19-21):	OP - CL
iP07	cL	Pr2	Configurable digital input i1F polarity (22-23):	OP - CL
iP08	cL	Pr2	Configurable digital input i2F polarity (22-24)	OP - CL
iP09	cL	Pr2	Polarity of High pressure-switch alarm (terminals 45-46)	OP - CL

Label	Valori	Menù	Descrizione Parametri	Limiti
iP10	cL	Pr2	Polarity of Low pressure-switch alarm (terminals 44-45)	OP - CL
d1d	0	Pr2	Dig. input set as oA1 or Co1 activation delay	0 ÷ 255 (sec)
d2d	0	Pr2	Dig. input set as oA2 or Co2 activation delay	0 ÷ 255 (sec)
d3d	0	Pr2	Dig. input set as oA3 or Co3 activation delay	0 ÷ 255 (sec)
d4d	0	Pr2	Dig. input set as oA4 or Co4 activation delay	0 ÷ 255 (sec)
d5d	0	Pr2	Dig. input set as oA5 or Co5 activation delay	0 ÷ 255 (sec)
d6d	0	Pr2	Dig. input set as oA6 or Co6 activation delay	0 ÷ 255 (sec)
did	20	Pr2	Liquid level alarm, signaling delay	0 ÷ 255 (min.)
didA	20	Pr2	External alarm, signaling delay:	0 ÷ 255 (min.)
ALMr	no	Pr2	Manual reset for compressor/fan alarms	no - yES
dEU	tPr	Pr2	Displaying measurement unit: pressure or temperature	tMP - PrS
CF	°C	Pr2	Measurement unit for temperature	°C - °F
PMU	Bar	Pr2	Measurement unit for pressure	BAr - PSI - PA
rES	dE	Pr2	Resolution for display and parameters	in - dE
dEU1	tPr	Pr2	Upper display: pressure or temperature selection	tMP - PrS
dSP2	P2	Pr2	Lower display default visualization	nu - P1 - P2 - P3 - P4 - StC1 - StC2 - SEtF
dEU2	tPr	Pr2	Lower display: pressure or temperature selection	tMP - PrS
Pbd	5.0	Pr2	Proportional band for compressors regulation, suction 1	0.1÷30.0(°C); 1÷50 (°F); 0.1÷10.0(BAR); 1÷150(PSI) 10÷1000(KPA)
rS	0.0	Pr2	Band offset, suction 1	-12.0÷12.0(°C) -20÷20(°F) -12.0÷12.0(BAR); -200÷ 200(PSI) -999÷999(KPA)
inC	500	Pr2	Integral time, suction 1	0 ÷ 999 sec
2Pbd	5.0	Pr1	Proportional band for compressors regulation, suction 2	0.1÷30.0(°C); 1÷50 (°F); 0.1÷10.0(BAR); 1÷150(PSI) 10÷1000(KPA)
2rS	0.0	Pr1	Band offset, suction 2	-12.0÷12.0(°C) -20÷20(°F) -12.0÷12.0(BAR); -200÷ 200(PSI) -999÷999(KPA)
2inC	500	Pr1	Integral time, suction 2	0 ÷ 999 sec
ton	60	Pr2	Time with Inverter at maximum capacity before starting a new load	0÷255s
toF	30	Pr2	Time with Inverter at minimum capacity before starting a new load	0÷255s
ESC	0.0	Pr1	Energy saving for compressors regulation	-50.0÷50.0(°C) -90÷90(°F) -20.0÷20.0(BAR) -300÷300(PSI) -2000÷2000(KPA)
2ESC	0.0	Pr1	Energy saving for compressors regulation, circuit 2	-50.0÷50.0(°C) -90÷90(°F) -20.0÷20.0(BAR) -300÷300(PSI) -2000÷2000(KPA)
OnOn	5	Pr2	Minimum delay between 2 switching on of the same compressor	0 ÷ 255 (min.)
OFOn	1	Pr2	Delay between the switching off and on of the same compressor	0 ÷ 255 (min.)
don	01:00	Pr2	Time delay between the insertion of two different loads	0 ÷ 99.5 (min.10sec)
doF	00:30	Pr2	Time delay between switching off of two different compressors	0 ÷ 99.5 (min.10sec)
donF	01:00	Pr2	Minimum time a stage stays ON	0 ÷ 99.5 (min.10sec)
MAon	0	Pr2	Maximum time a stage stays switched ON	0 ÷ 24 (hour)
FdLy	no	Pr2	'don' delay enabled also for the first request	no - yES
FdLF	no	Pr2	'doF' delay enabled also for the first switching off	no - yES

Label	Valori	Menù	Descrizione Parametri	Limiti
odo	20	Pr2	Regulation delay at power on	0 ÷ 255 (sec.)
LSE	-40.0	Pr2	Minimum set point (compressors)	-50.0÷HSE(°C) -58.0÷HSE(°F) PA04÷HSE(BAR,PSI,KPA)
HSE	10.0	Pr2	Maximum set point (compressors)	LSE÷150.0(°C) LSE÷302(°F) LSE÷PA20(BAR , PSI , KPA)
2LSE	-40.0	Pr2	Minimum set point compressors, for circuit 2	-50.0÷2HSE(°C) -58.0÷2HSE(°F) 3P04÷2HSE(BAR,PSI,KPA)
2HSE	10.0	Pr2	Maximum set point compressors for circuit 2	LSE÷150.0(°C) LSE÷302(°F) LSE÷3P20(BAR , PSI , KPA)
Lit	90.0	Pr2	Set point for liquid injection	0.0 ÷ 180.0°(°C) 32 ÷ 356(°F)
Lid	10.0	Pr2	Differential for liquid injection	0.1 ÷ 25.5° (°C) 1 ÷ 50° (°F)
LiPr	nP	Pr2	Probe selection for liquid injection	nP - P3 - P4
Pb	5.0	Pr2	Proportional band for fan regulation	0.1÷30.0(°C) 1÷50 (°F) 0.1÷10.0(BAR) 1÷150(PSI) 10÷1000(KPA)
ESF	0.0	Pr2	Energy saving differential for fan regulation	-50.0÷50.0(°C) -90÷90(°F) -20.0÷20.0(BAR) -300÷300(PSI) -2000÷2000(KPA)
PbES	0.0	Pr2	Band offset for fan regulation in ES	-50.0÷50.0(°C) -90÷90(°F) -20.0÷20.0(BAR) -300÷300(PSI) -2000÷2000(KPA)
Fon	30	Pr2	Time delay between the insertion of two different fan	0 ÷ 255 (sec)
FoF	15	Pr2	Time delay between switching off of two different fan	0 ÷ 255 (sec)
LSF	10.0	Pr2	Minimum set point (fan)	-50.0÷HSF(°C) -58.0÷HSF(°F) FA04(FPb)÷HSF(BAR , PSI , KPA)
HSF	50.0	Pr2	Maximum set point (fan)	LSF÷150.0(°C) LSF÷302(°F) LSF÷FA20 (BAR , PSI , KPA)
PAO	30	Pr2	Alarm probe delay at power on	0 ÷ 255 (min.)
LAL	-40.0	Pr1	Pressure alarm set low limit (compressors)	-50.0÷HAL(°C); -58÷HAL(°F); PA04÷HAL(BAR , PSI , KPA)
HAL	10.0	Pr1	Pressure alarm set high limit (compressors)	LAL÷150.0(°C); LAL÷302(°F); LAL÷PA20(BAR , PSI , KPA)
tAo	15	Pr1	Pressure/temperature alarm delay (compressors)	0 ÷ 255 (min.)
ELP	-45.0	Pr2	Electronic pressure switch threshold	-50.0÷STC1(°C) -58÷STC1(°F) PA04÷STC1(BAR , PSI , KPA)
2LAL	-50.0	Pr2	Pressure alarm set low limit, , suction 2	-50.0÷2HAL(°C); -58÷2HAL(°F); 3PA4÷2HAL(BAR , PSI , KPA)
2HAL	20.0	Pr2	Pressure alarm set high limit, suction 2	2LAL÷150.0(°C); 2LAL÷302(°F); 2LAL÷3P20(BAR , PSI , KPA)
2tAo	15	Pr2	Pressure/temperature alarm delay , suction 2	0 ÷ 255 (min.)
2ELP	-50.0	Pr2	Electronic pressure switch threshold, suction 2	-50.0÷STC2(°C) -58÷STC2(°F) 3P04÷STC2(BAR , PSI , KPA)
SEr	999	Pr2	Working hour alarm set (tenth of ours)	1 ÷ 999 (0= disabled) (10 hour)
PEn	5	Pr2	Low Pressure switch maximum activations	0 ÷ 15
PEI	60	Pr2	Low Pressure switch activations time	0 ÷ 255 (min.)
SPr	1	Pr2	Number of compressors ON with faulty probe	0 ÷ 6
2PEn	5	Pr2	Low Pressure switch maximum activations, suction 2	0 ÷ 15
2PEI	60	Pr2	Low Pressure switch activations time, suction 2	0 ÷ 255 (min.)
2SPr	1	Pr2	Number of compressors ON with faulty probe, suction 2	0 ÷ 6
dtL	110.0	Pr2	DLT high temperature alarm threshold	0÷180°C 32÷356°F
dLd	5	Pr2	DLT high temperature alarm delay	0÷15 (min.)

Label	Valori	Menù	Descrizione Parametri	Limiti
dLH	15.0	Pr2	DLT high temperature alarm differential for recovery	0.1÷25.5°C 1÷50°F
dtLi	nP	Pr2	Probe selection for DLT control	nP - P3 - P4 - P5
dtLP	50	Pr2	Compressors OFF in case of discharge line temperature alarm	0÷80(%)
dtLF	YES	Pr1	Stop compressor in case of dtL alarm	no - yES
PoPr	50	Pr2	Capacity engaged with suction 1 probe failure	0÷100
LAF	0.0	Pr1	Low pressure alarm set (fan)	-50.0÷HAF(°C); -58÷HAF(°F); FA04÷HAF(BAR , PSI , KPA)
HAF	60.0	Pr1	High pressure alarm set (fan)	LAF÷150.0(°C) LAF÷302(°F) LAF÷FA20(BAR , PSI , KPA)
AFd	5	Pr2	Pressure alarm delay	0 ÷ 255 (min)
HFc	YES	Pr2	Compressor off with high pressure (temperature) alarm	no – yES
dHF	5	Pr2	Interval between 2 compressors turning off with high pressure (temperature) alarm	0 ÷ 255 (sec.)
PnF	5	Pr2	Fan pressure switch maximum activations	0 ÷15
PiF	60	Pr2	Fan pressure switch activations time	0 ÷ 255 (min)
FPr	1	Pr2	Fan ON with faulty probe	0 ÷ 6
ASH0	5.0	Pr2	Differential for low superheat pre-alarm	0.1 to 30.0°C/ 1 to 60°F
ASH1	240	Pr2	Delay for signalling low superheat pre-alarm	0÷255 sec
ASH2	3.0	Pr2	Low suction superheat alarm threshold	0.1÷15.0°C/ 1÷30°F
ASH3	120	Pr2	Delay for signalling low superheat alarm	0÷255 sec
ASH4	no	Pr2	Switching off compressors with low superheat alarm	No, Yes
ASH5	5.0	Pr2	Differential to restart regulation after of low superheat alarm with compressor stop	0.1÷15.0°C/ 1÷30°F
ASH6	1	Pr2	Delay to restart regulation after superheat > ASH2+ASH5	0÷255 min
ASH7	10.0	Pr2	Superheat value to enable hot gas injecting valve	0.1÷30.0°C/ 1÷60°F
ASH8	2.0	Pr2	Differential for ASH7	0.1÷15.0°C/ 1÷30°F
ASH9	nP	Pr2	Probe selection for superheat monitoring	nP(0) - P3(1) - P4(2)
dSEP	nP	Pr2	Dynamic Set point function enabled	nP – P3 - P4
dSES	35.0	Pr2	External temperature set for DYNAMIC SET POINT function	-50.0 ÷ 150.0 (°C) -58 ÷ 302 (°F)
dSEb	-20.0	Pr2	Proportional band DYNAMIC SET POINT	-50.0 ÷ 50.0(°C) -90 ÷ 90 (°F)
dSEd	5.0	Pr2	Differential for DYNAMIC SET POINT	-50.0÷50.0(°C) -90÷90(°F) -20.0÷20.0(BAR) -300÷300(PSI) -2000÷2000(KPA)
AOC	Cur	Pr2	Analogue output 1 working mode	Cur – tEn
AOF	nu	Pr2	Analog output 1 function	nu – InC1 – InC2 – InF
InCP	no	Pr2	Frequency compressor always starts at first	no – yES
AOP	nP	Pr2	Reference probe for the analog output 1	nP(0) - P3(1) - P4(2)
LAO	0.0	Pr2	Temperature value associated to minimum value of analog output (AOM)	-50.0÷150.0(°C) -58÷302(°F)
UAO	100.0	Pr2	Temperature value associated to the maximum value of analog output, 10V or 20mA	-50.0÷150.0(°C) -58÷302(°F)
AOM	0	Pr2	Minimum value of analogue output 1	0 ÷ 100 (%)
AOt	0	Pr2	Time with analog output 1 at max when after exceeding AOM	0÷15s
MPM	100	Pr2	Maximum % variation per minute, analog output 1	nu, 1 ÷ 100%
SAO	50	Pr2	Percentage of analog output 1 in case of probe failure	0 ÷ 100 (%)

Label	Valori	Menù	Descrizione Parametri	Limiti
AOH	70	Pr2	Maximum analog output 1 percentage when silence mode function is enabled	0 ÷ 100 (%)
2AOC	Cur	Pr2	Analogue output 2 working mode	Cur – tEn
2AOF	nu	Pr2	Analog output 2 function	nu – InC1 – InC2 – InF
2AOP	nP	Pr2	Reference probe for the analog output 2	nP(0) - P3(1) - P4(2)
2LAO	0.0	Pr2	Temperature value associated to minimum value of analog output (2AOM)	-50.0÷150.0(°C) -58÷302(°F)
2UAO	100.0	Pr2	Temperature value associated to the maximum value of analog output2, 10V or 20mA	-50.0÷150.0(°C) -58÷302(°F)
2AOM	0	Pr2	Minimum value of analogue output 2	0 ÷ 100 (%)
2AOt	0	Pr2	Time with analog output 2 at max when after exceeding AOM	0÷15s
2MPM	100	Pr2	Maximum % variation per minute, analog output 2	nu, 1 ÷ 100%
2SAO	50	Pr2	Percentage of analog output 2 in case of probe failure	0 ÷ 100 (%)
2AOH	70	Pr2	Maximum analog output 2 percentage when silence mode function is enabled	0 ÷ 100 (%)
tbA	YES	Pr1	Alarm relay silencing	no - yES
OAP	cL	Pr2	Polarity alarm relay	OP - CL
oFF	no	Pr2	off function enabled	no - yES
bUr	YES	Pr2	Buzzer enabled	no - yES
Adr	1	Pr2	Serial address	1 ÷ 247
rEL	3.5	Pr2	Release firmware	Readable only
SrL	-	Pr2	Sub-Release firmware	Readable only
Ptb	-	Pr2	Parameter table code	Readable only
Pr2	-	Pr1	Pr2 access	Readable only

COPELAND

Copeland Controls S.r.l.
Z.I. Via dell'Industria, 27 - 32016 Alpago (BL) ITALY
Tel. +39 0437 9833 r.a. - copeland.com - dixell@copeland.com