VBG6, MR6

6-Way Valve and Actuator for 4-pipe systems

APPLICATION

VBG6 ball valves are designed as change-over valve to connect one 2-pipe heat exchanger (Fan-coil Unit or Ceiling) to the 4-pipe system, ideally together with the Kombi-FCU Pressure Independent Control Valve used for dynamic balancing.

The simultaneous rotation of two balls, mechanically connected to the one stem, opens supply and return ways on one side (e.g. cooling) and closes at the same time the other side (heating). That avoids any mixing between flows and reduce potential energy losses.

VBG6 valves are delivered with flow limiter kit in the valve box. That gives flexibility in flow rate adjustment by picking adequate limiter disk with Kv value displayed on. Each Kv value should be written during installation on the label stripped on the valve neck.

VBG6 valves are designed to be actuated by MR6 rotary valve actuators in two types. On/off actuator gives the basic change-over functionality, modulating enables setting mid-position to close the valve. Position feedback on modulating actuator shell be used for remote system monitoring and system check.

SPECIAL FEATURES

- Change-over Valve with scalable flow limitations covering all flow needs with only 3 valve versions
- In combination with modulating actuator option to close the valve in mid-position
- Externally threaded valve versions for easier installation
- Optional use of on/off or modulating actuator
- Modulating actuator with position feedback
- Pre-wired actuator with clear position indication and manual operation
- Can be combined with the Kombi-FCU for high accurate flow control; Ideal connection for 4-pipe systems including hydronic dynamic balancing

INSTALLATION EXAMPLE

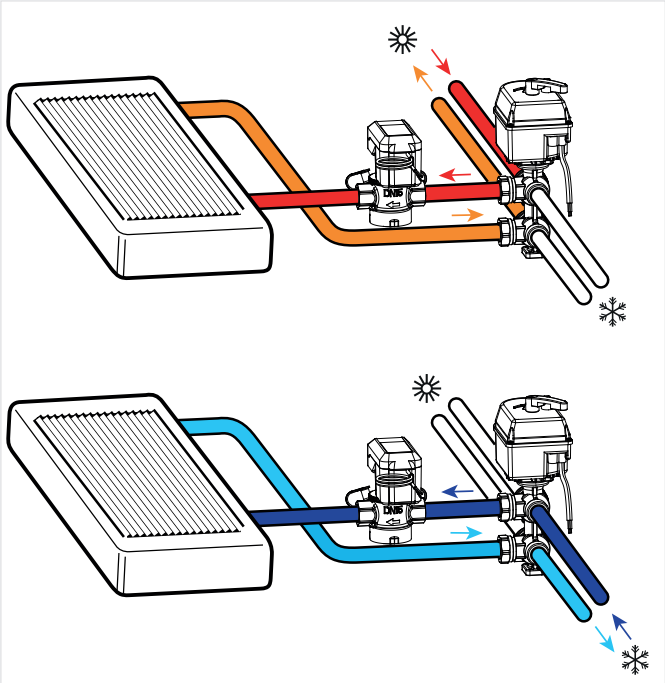

VALVES VBG6

Technical Data

Media	
Controlled medium:	Chilled or hot water according to VDI 2035 with up to 50 % Glycol (oxygen concentration less than 0.2 g/m^3, pH 8...9.5; Fe<0.5 mg/kg; Cu<0.1 mg/kg).
Pressure values	
Nominal pressure rating:	PN16
Max. differential pressure :	2bar
Operating temperatures	
Media temperature:	+2°...+110°
Ambient temperature:	0°...+55°

Specifications	
Valve type:	6-way ball valve, change over
Leakage rate:	Class A as per EN 12266-1/12 – P12
Total operation angle:	90°
First side operation angle :	0...32°
“Dead zone” operation angle:	32°...58°
Second side operation angle:	58°...90°
Flow characteristic:	linear
Connection/Sizes	
Connection type:	External BSPP, flat sealing

CONSTRUCTION

Overview

Components	Materials
Material body	Brass
Not depicted components:	
Inner parts	Brass
O-rings	EPDM, PTFE, FKM
Packaging	Separate unit pack

TECHNICAL CHARACTERISTICS

kvs-Values

DN size:	Kv max:	Kv flow limitation:	O.S. no.:
15	1.25	0.25 / 0.40 / 0.63 /1	VBG6-15
20	2.8	0.7 / 1.0 / 1.6 / 2.1	VBG6-20
20	4.0	2.5	VBG6-20F

Flow limiters by kv disks

VBG6 valves are supplied with the maximum flow rate defined by Kv max value.

As there is typically heating flow much lower comparing to cooling one the valve should be adjusted on the flow rate.

VBG6 valves are delivered with flow limiter kit in the valve box. That gives flexibility in flow rate adjustment by picking adequate kv disk with Kv value displayed on. Each Kv value should be written during installation on the label stripped on the valve neck.

VBG6-15

DN15 Kv_{max} 1.25	Kv
1	0.25
2	0.40
3	0.63
4	1.00

VBG6-20

DN20 Kv_{max} 2.8	Kv
1	0.7
2	1.0
3	1.6
4	2.1

VBG6-20HF

DN20 Kv_{max} 4.0	Kv
1	2.5

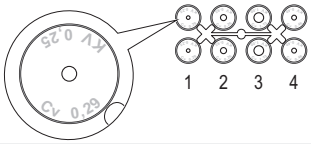

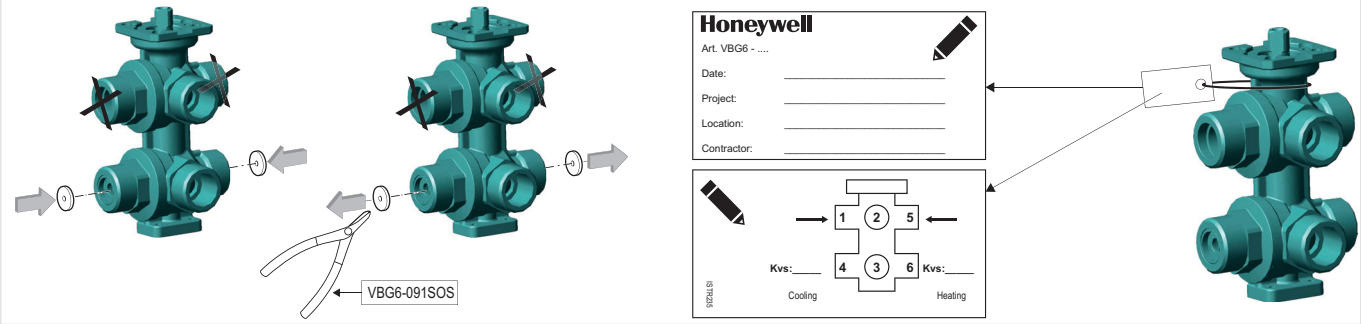

Port connections

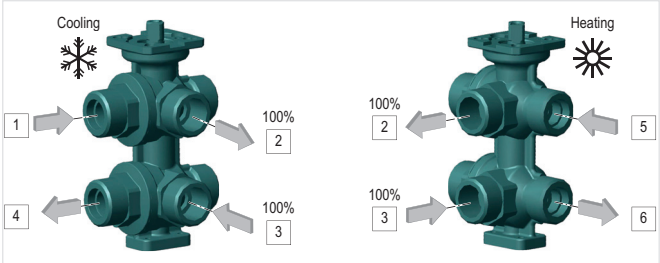

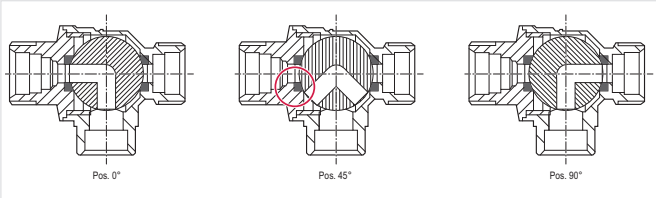

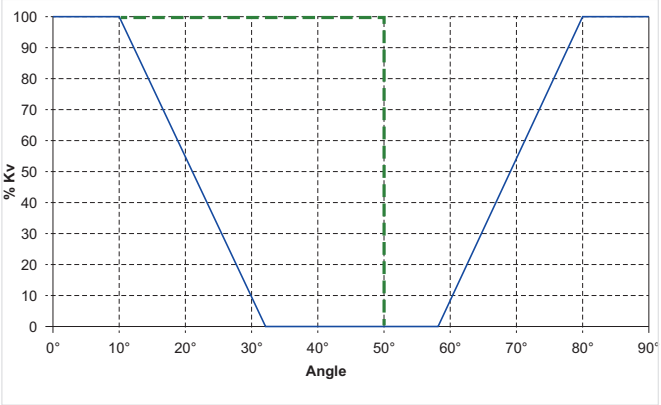

VBG6 valves are designed with integrated pressure relief functional device.

That integrated device prevents systems from potential damages caused by pressure changes when the valve is close (45°) and ambient temperate could heat-up or cool-down close circuit.

The integrated pressure relief device balance potential overpressure in the coils side with the main system pressure when VBG6 valve closes the coil circuit (up to rotations 50°).

Pressure drop characteristics

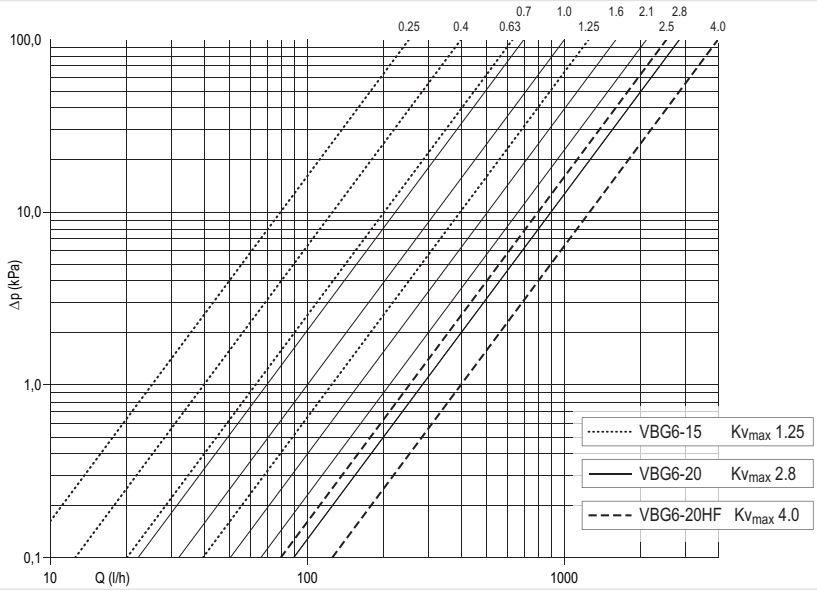

DIMENSIONS

Valves

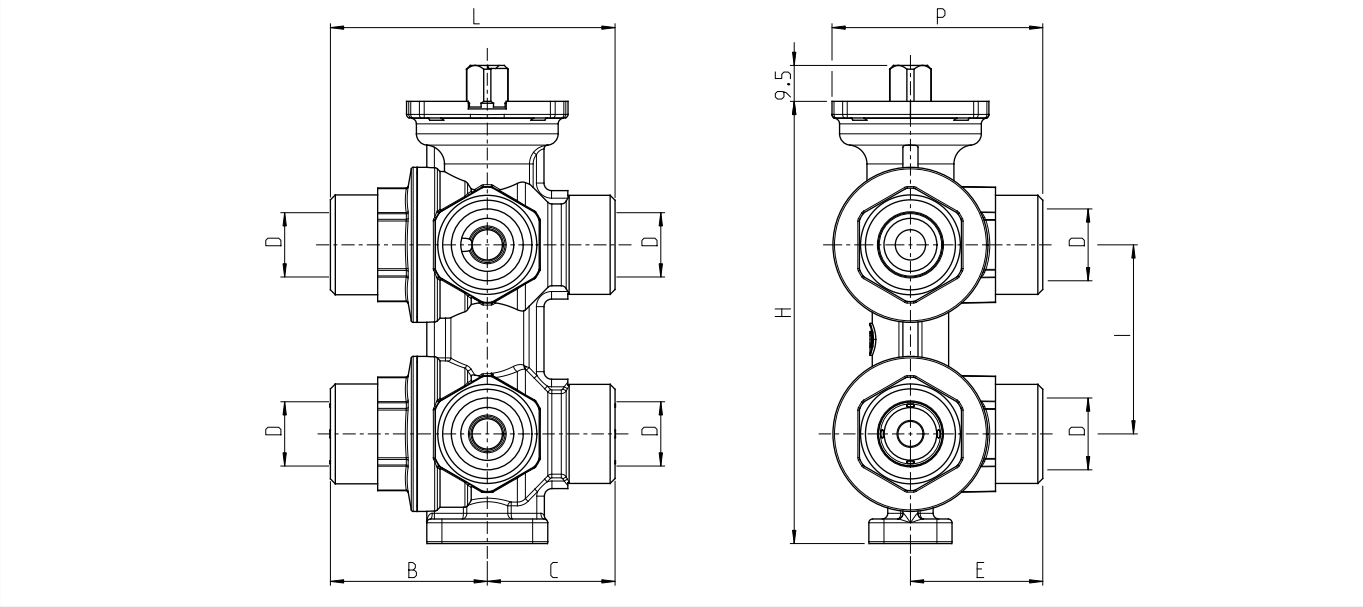

Parameter		Values	
Nominal size diameter:	DN	15	20
Connection:	D	G 3/4"	G 3/4"
Dimensions:	B	41.5	47
	C	33.8	39
	E	35	41
	G	G 3/4"	G 3/4"
	H	117	141
	I	50	60
	P	55.9	62
	L	75.3	86

ORDERING INFORMATION

Options

Description:	DN:	O.S. no.:
6-way valve; external threads, kv max 1.25; flow limiters 0.25/0.40/0.63/1.00	DN15	VBG6-15
6-way valve, external threads, kv max 2.8; flow limiters 0.7/1.0/1.6/2.1	DN20	VBG6-20
6-way valve, high flow; externals thread, kv max 4.00; flow limiter 2.5	DN20	VBG6-20HF

Accessories

	Description	Part No.
	Fastening Base for VBG6	
		VBG6-063ZA
	Insulation Shell	
	Insulation shell for DN15 type	VBG6-063GI-15
	Insulation shell for DN20 types	VBG6-063GI-20
	Pliers for KV Disks	
		VBG6-091SOS

Suggested PICV for dynamic balancing

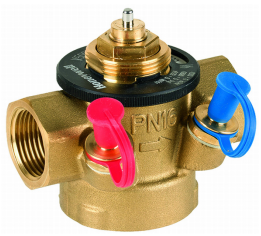	**V5005TY; DN15, DN20**	
		V5005TYxxx
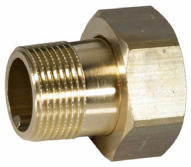	**Piping to connect VBG6 to V5005TY DN15**	
		ACS-15T

INSTALLATION GUIDELINES

Mounting

For more-detailed information on mounting, see the Mounting Instructions supplied with each valve.

Please strictly follow flow direction and port connection guidance. Cooling side must be connected to ports “1” and “4”!

The water quality must meet VDI 2035 requirements with max 50% of Glycol.

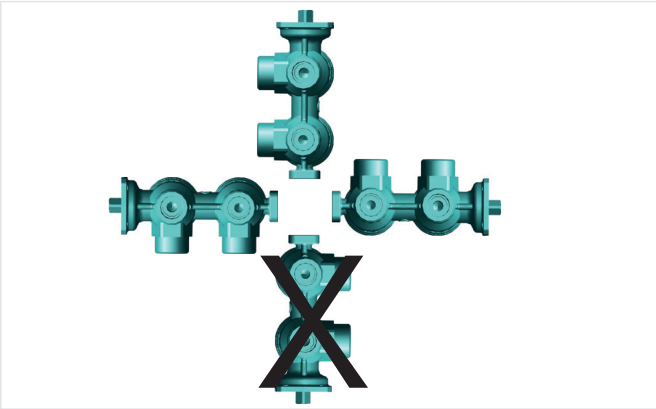

TRANSPORTATION AND STORAGE

Keep parts in their original packaging and unpack them shortly before use.

The following parameters apply during transportation and storage:

Parameter	Value
Environment:	clean, dry and dust free
Min. ambient temperature:	- 20 °C
Max. ambient temperature:	70 °C
Min. ambient relative humidity:	0 % *
Max. ambient relative humidity:	55 % *

*non condensing

ACTUATOR MR6

Technical Data

Operating temperatures	
Ambient temperature:	1°C...+55°C
Media temperature :	+2°C +110°C
Specifications	
Actuator type:	Rotary actuator for VBG6
Power supply:	24 VAC+/-15 %, 50Hz
Control signal:	ON/OFF (MR6-24-2POS); modulating (MR6-24-010)
Power consumption:	see “Actuator types”
Nominal torque:	8 Nm
Operating humidity range:	0 %...80 %, non-condensing
Runtime:	75 sec/90°
Nominal operation angle:	90°
Cable specification:	1 m fixed cable, 3x0.5 mm^2; crimped
IP Rating / Protection degree:	IP44
Environmental conditions:	For use in home (residential, commercial, and light-industrial) environments
Protection class:	II
Approvals:	CE

ORDERING INFORMATION

Options

O.S. no.	Power Supply	Control Signal	Power consumpton			Cable
			Driving		Holding	
			W	VA	W	
MR6-24-2POS	24 VAC ±15%; 50 Hz	on/off	3.0	3.0	relay ON 0,6W relay OFF 0W	3 x 0,5 mm^2 1m length
MR6-24-010	24 VAC ±15%; 50 Hz	modulating 0 - 10 VDC, 4 - 20mA Input impedance: 26kΩ (position signal Y)	2.5	2.5	0.3	4 x 0,5 mm^2 1m length

DIMENSIONS

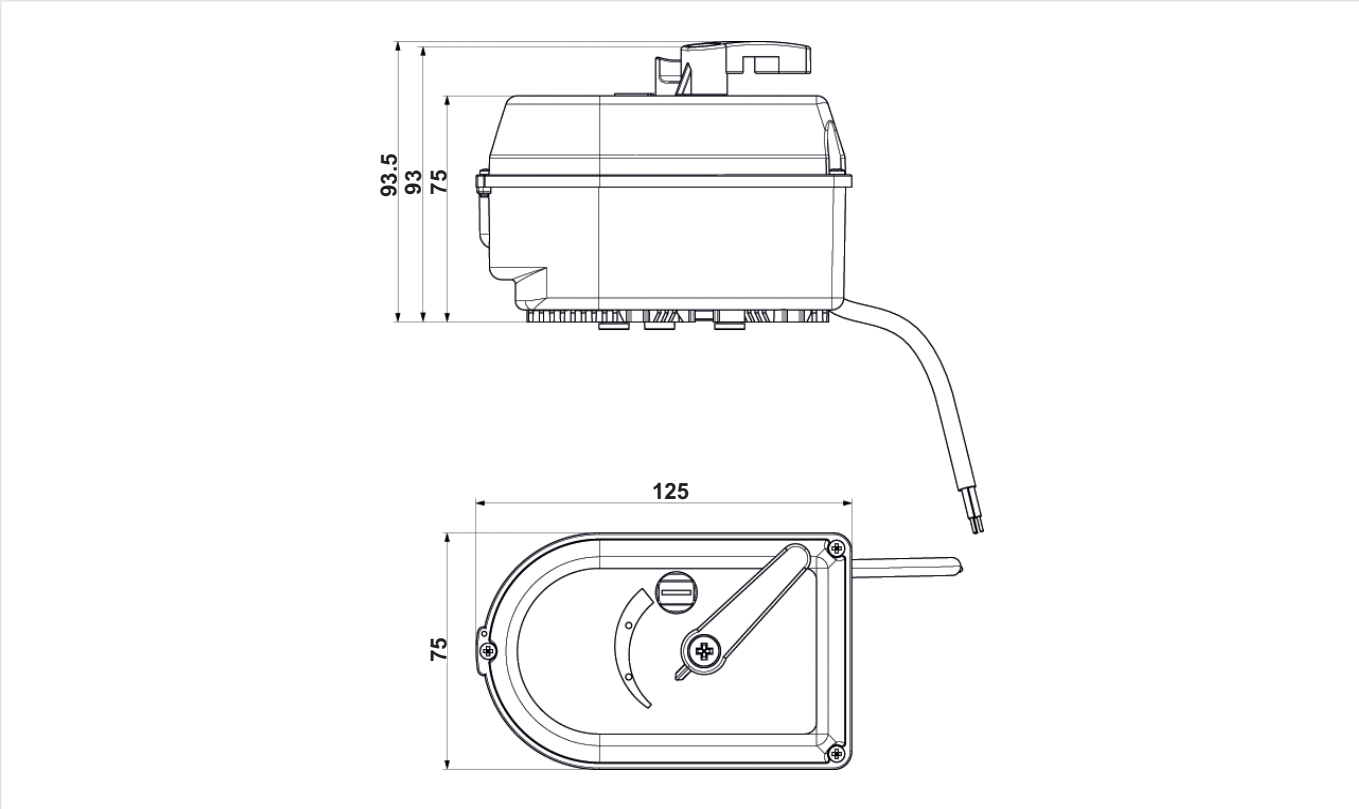

MR6 with VBG6-15

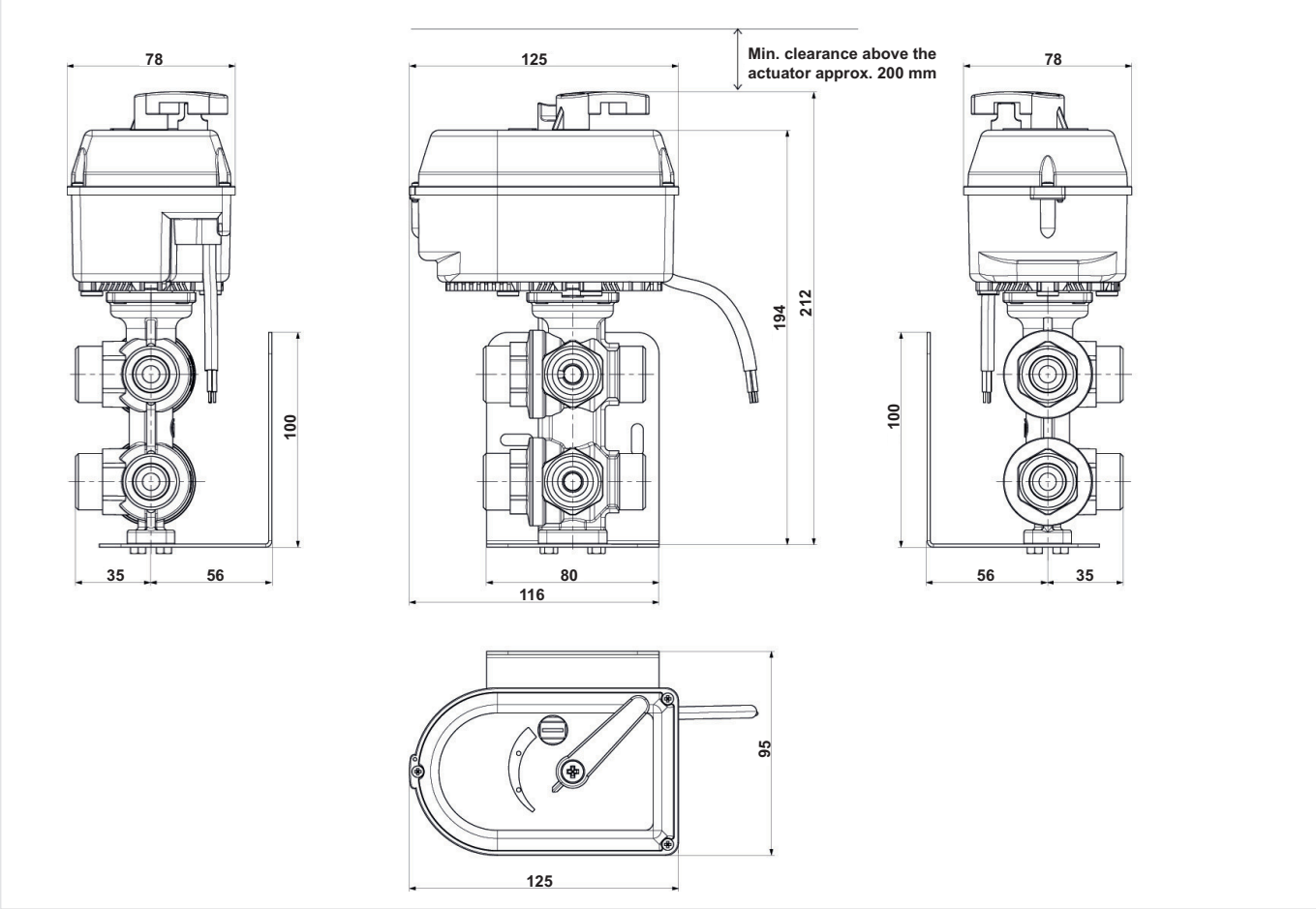

MR6 with VBG6-20/20HF

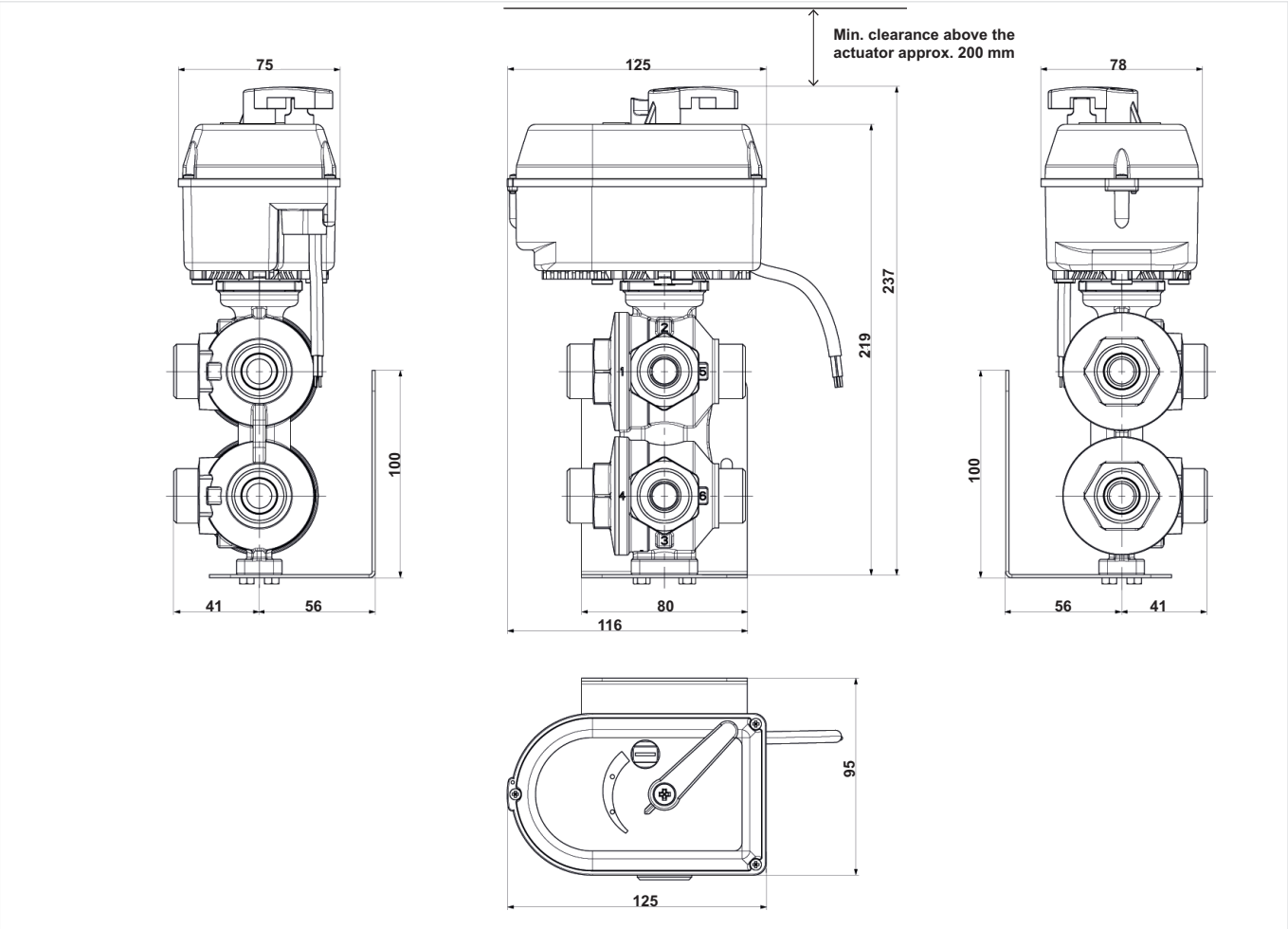

INSTALLATION GUIDELINES

Mounting

For more-detailed information on mounting, see the Mounting Instructions supplied with each actuator.

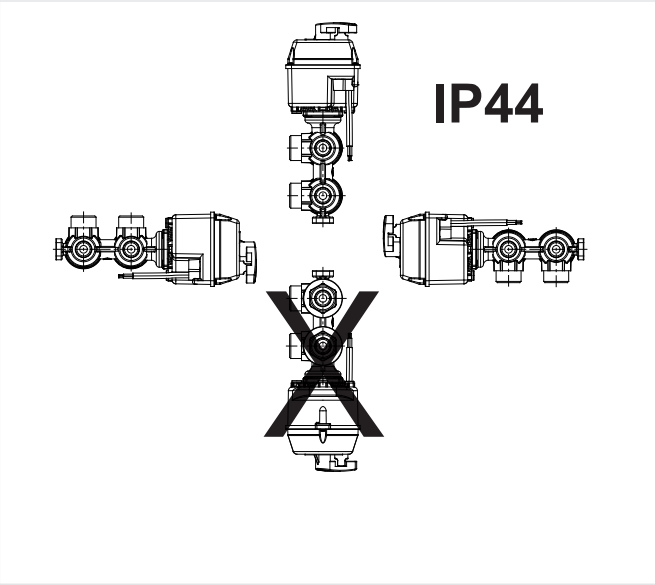

Recommendation: Turn the valve actuator at least once a week to avoid sticking the valve in one position

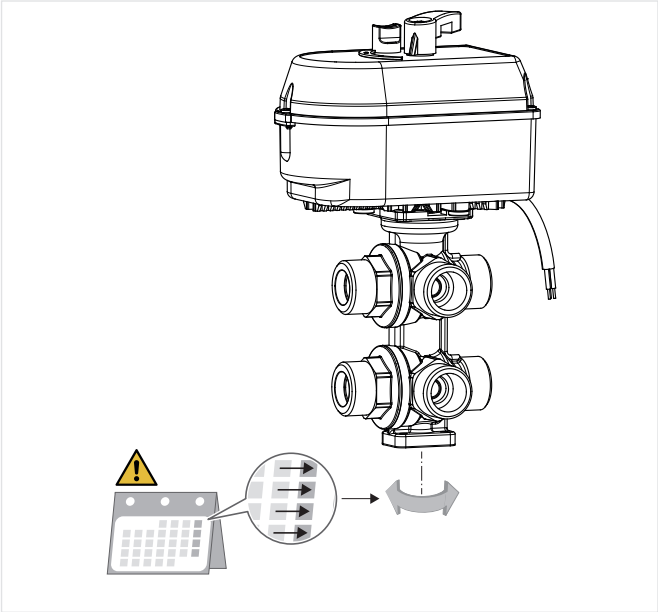

VBG6-15 with Kombi-FCU DN15 (connected via ACS-15T)
Option 1

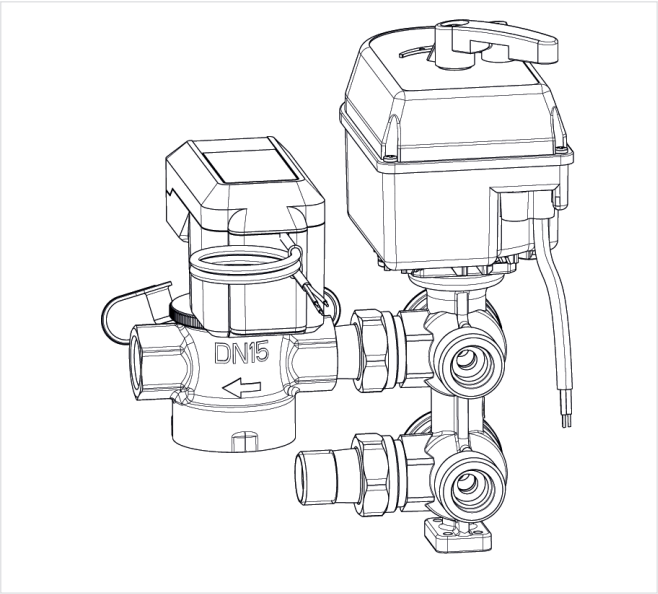

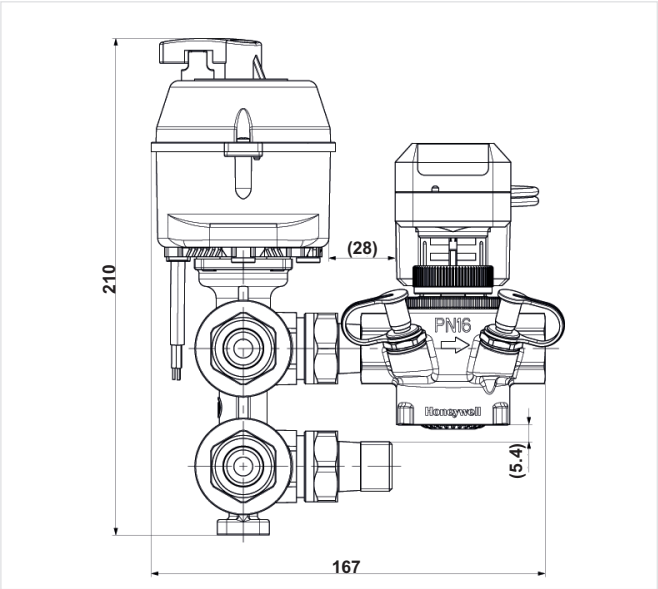

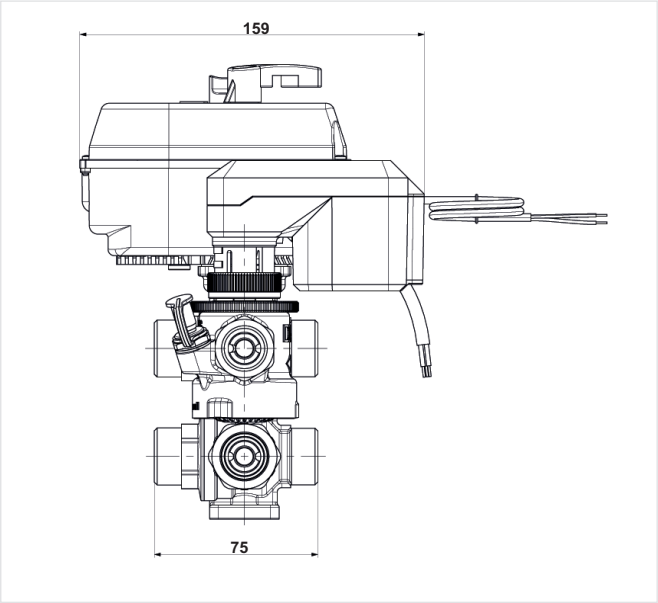

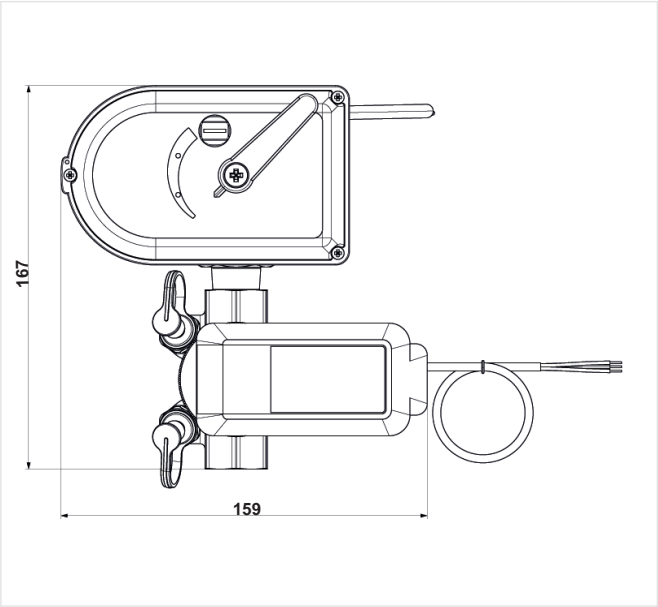

Option 2

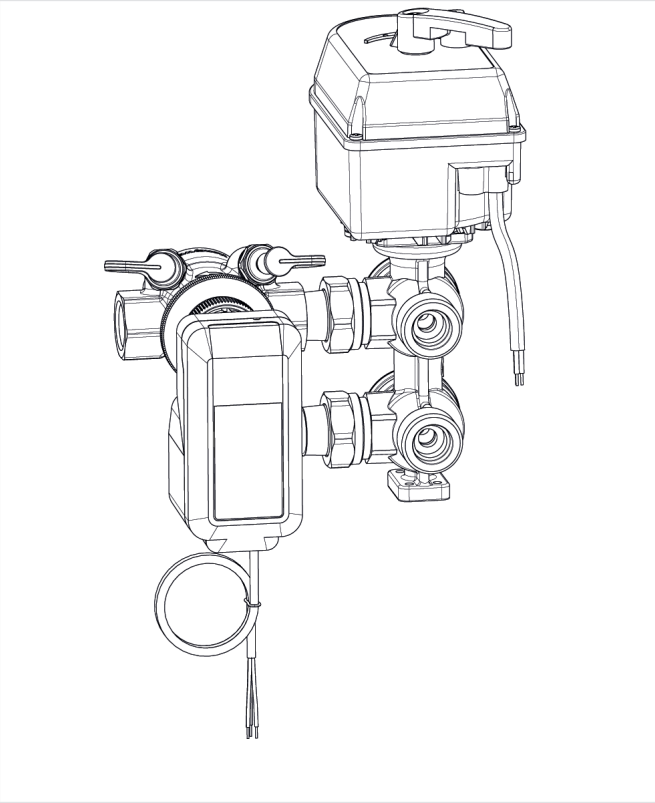

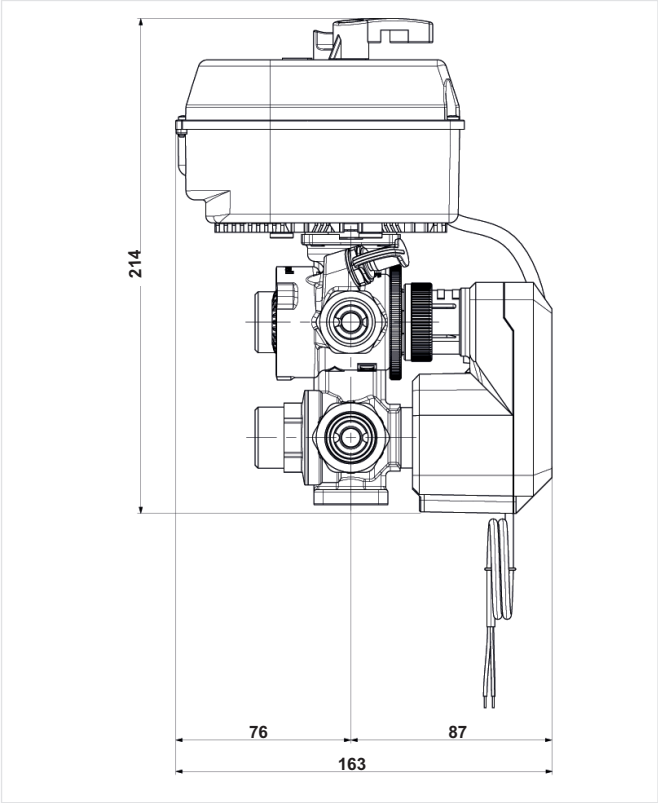

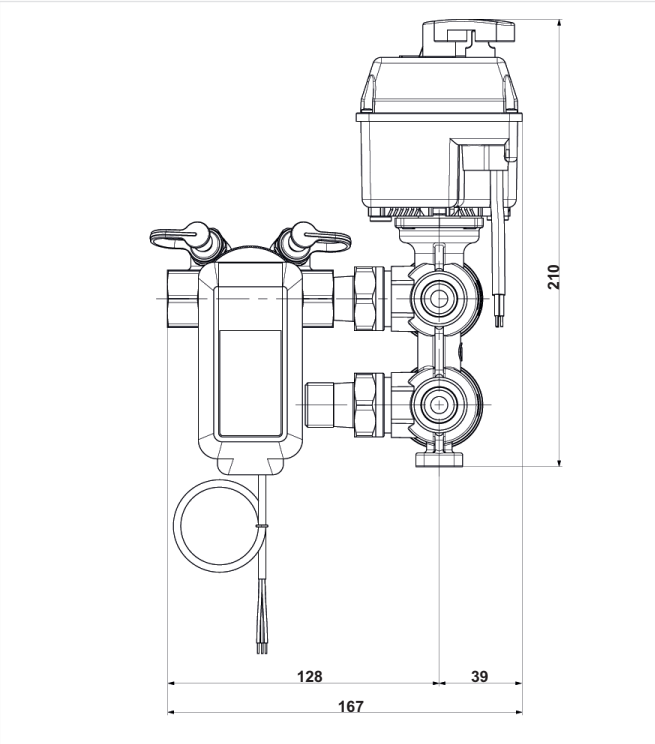

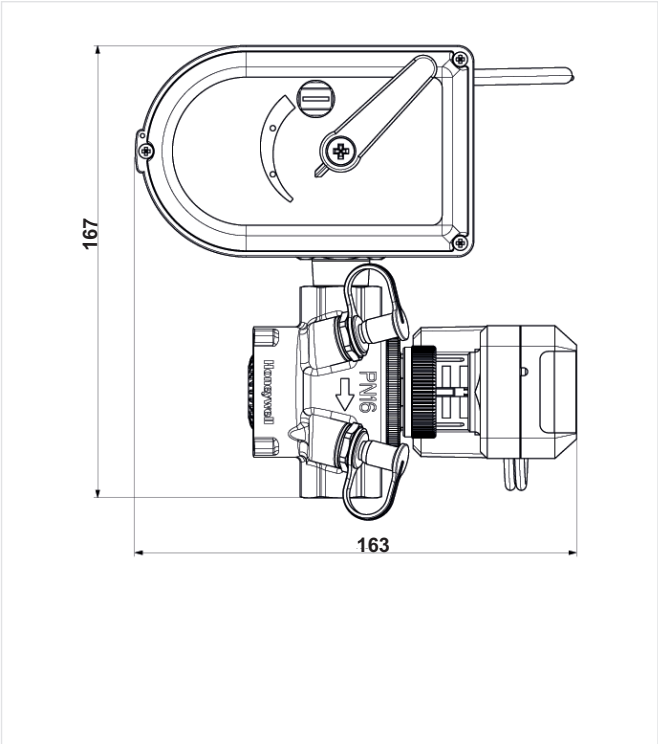

Electrical Installation

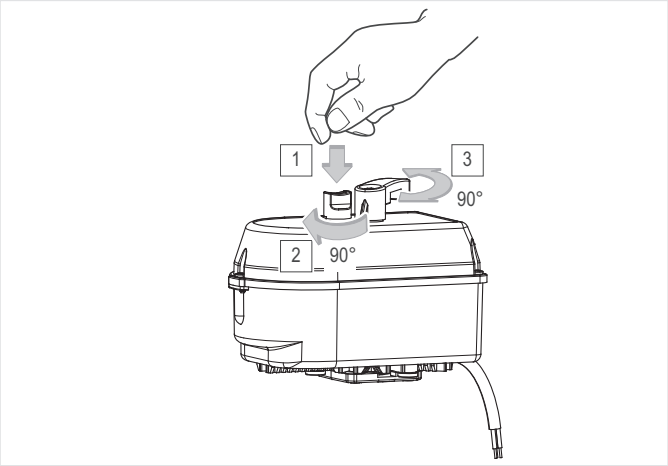

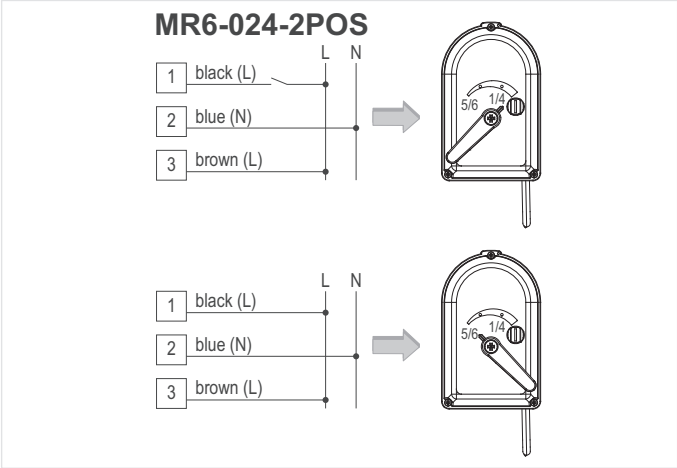

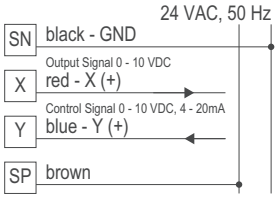

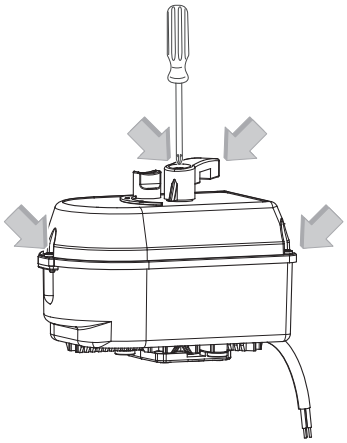

DIP Switches

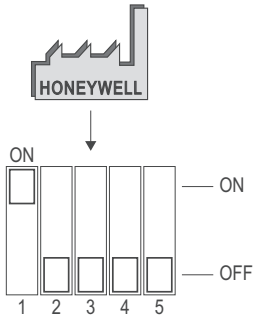

DIP	CCW	CW
1	OFF	ON

DIP		
2	OFF	ON

DIP	0,16 - 9,84V 0 - 20mA	2 - 9,84V 4 - 20mA	0,16 - 4,88V	5,12 - 9,84V
Con. sig. resolution:	40mV	40mV	40mV	40mV
3	OFF	OFF	ON	ON
4	OFF	ON	OFF	ON

DIP	U(V)	I(mA)
5	OFF	ON

Environmental & Energy Solutions
Honeywell GmbH
Hardhofweg
74821 MOSBACH
GERMANY
Phone: (49) 6261 810
Fax: (49) 6261 81309
http://ecc.emea.honeywell.com

Manufactured for and on behalf of the
Environmental and Combustion Controls
Division of Honeywell Technologies Sàrl, Z.A.
La Pièce 16, 1180 Rolle, Switzerland
by its Authorised Representative Honeywell GmbH
EN0H-2332GE23 R1117
Subject to change
© 2017 Honeywell GmbH

Honeywell