OPTIMIZER UNITARY CONTROLLER

Honeywell 24 VAC/VDC Unitary Controllers provide flexible, freely programmable, demand-led control that delivers tangible benefits to reduce energy spending while driving new levels of functionality and efficiency in today's buildings.

These new controllers offer BACnet™ IP, BACnet™ T1L, or BACnet™ Client/Server as their backbone communication protocol and Sylk™, Modbus RTU as embedded integration protocols, flexible universal input/output (UIOs), power relays, solid-state relays (SSRs), and optional expansion I/O Modules.

They offer performance-based engineering with Niagara 4 and enable Single-Tool-Engineering throughout the whole Building Management System with cost-effective installation.

Powered by our Honeywell Engineering Starter Kit (ESK), the Honeywell Optimizer Unitary controllers come with factory installed common unitary application template programs with 2D and 3D graphics along with a configuration wizard. The programs, graphics, and wizards are easy to use and also fully editable and removable using the Niagara Framework® software and Honeywell IRM Tools.

The integrated Bluetooth® Low Energy (BLE) capability enables an easy pairing with mobile apps.

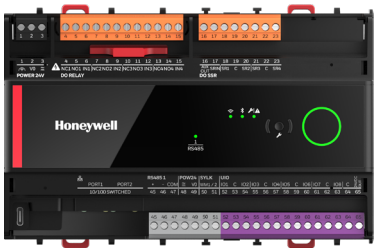

Honeywell Unitary Controllers are available in large and small housing options.

FEATURES AND HIGHLIGHTS

SIMPLE AND FLEXIBLE ENGINEERING

- UIOs configurable as analog input, binary input, binary output and analog output.
- High inrush current relays.
- Solid-state relays with increased current support compared to standard Triac outputs.
- Sylk™ two-wire polarity insensitive interface connects to Honeywell Sylk™ wall modules without hardware I/O.
- Modbus RTU for integration.
- Daisy chain ethernet connection ensures reliable data speed over greater distance.
- Engineering tools including function block library and sample application templates ensuring a consistent experience from the room, plant controllers, and supervisor.
- Optional I/O expansion modules via Modbus RTU (Supported only with N4.15u1 or later).

EFFICIENCY AND SAFETY ON SITE

- Easy to install into fuse box (DIN43880) or on DIN rail, surface mount.
- Optional terminal covers for protection.
- Color-coded, removable terminal blocks to simplify wiring and replacement.
- Live debugging and fast differential download for application changes to limit downtime to a minimum.
- Power failure detection and data recovery.
- Easy pairing with mobile apps via integrated Bluetooth® Low Energy (BLE) independent of local IT infrastructure and without needing to open the ceiling for recalibration.

EASY UPGRADE TO IP

- RJ45 and twisted pair T1L available as Ethernet BACnet™ IP communication standards.
- Increased network speeds compared to traditional building automation systems.
- Support of standard BMS and IT protocols, such as BACnet™, offering an open system for interconnectivity.
- Possibility to reuse installed wiring as Ethernet T1L uses two-core twisted pair cables with screw terminals.
- Supports Ethernet fail-safe daisy chains (BACnet™ T1L only) over distances of up to 1,640 feet (500 meters) and distances of up to 3,280 feet (1,000 meters) without fail-safe daisy chain functionality between two Honeywell BACnet™ T1L devices.

Honeywell

CONTROLLER PART NUMBERS DESCRIPTION

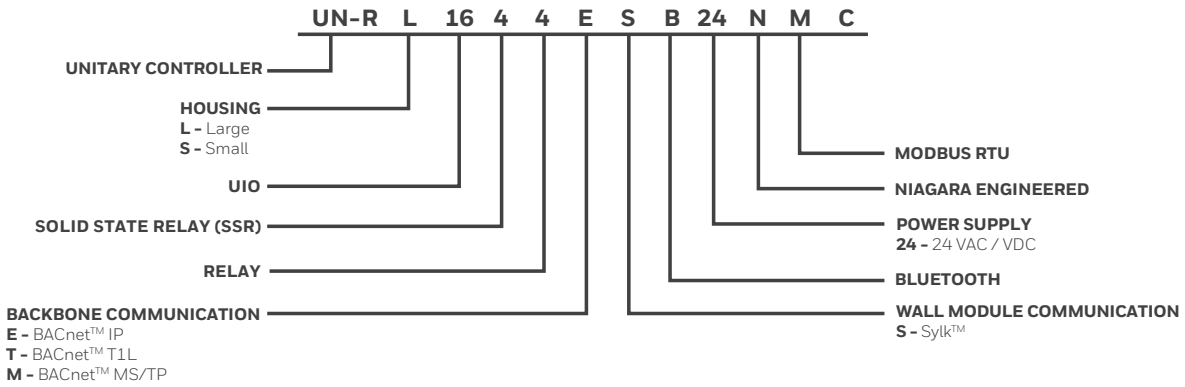

PART NUMBERS

UNITARY CONTROLLER PART NUMBERS

PART NUMBER	HOUSING	UNIVERSAL IO	SOLID STATE RELAY (SSR)	RELAY	COMMUNICATION	SYLK™ BUS	BLUETOOTH
UN-RS0844ES24NMC	Small	8	4	4	BACnet™ IP	Yes	No
UN-RS0844ESB24NMC	Small	8	4	4	BACnet™ IP	Yes	Yes
UN-RS0844MS24NMC	Small	8	4	4	BACnet™ MS/TP	Yes	No
UN-RS0844MSB24NMC	Small	8	4	4	BACnet™ MS/TP	Yes	Yes
UN-RS0844TS24NMC	Small	8	4	4	BACnet™ T1L	Yes	No
UN-RS0844TSB24NMC	Small	8	4	4	BACnet™ T1L	Yes	Yes
UN-RL1644ES24NMC	Large	16	4	4	BACnet™ IP	Yes	No
UN-RL1644ESB24NMC	Large	16	4	4	BACnet™ IP	Yes	Yes
UN-RL1644MS24NMC	Large	16	4	4	BACnet™ MS/TP	Yes	No
UN-RL1644MSB24NMC	Large	16	4	4	BACnet™ MS/TP	Yes	Yes
UN-RL1644TS24NMC	Large	16	4	4	BACnet™ T1L	Yes	No
UN-RL1644TSB24NMC	Large	16	4	4	BACnet™ T1L	Yes	Yes

ACCESSORIES/REPLACEMENT PARTS

PARAMETER	SPECIFICATION
CW-Cov-L-Unitary	Terminal cover for the L-version of the unitary controller (sold in pack of 10)
CW-Cov-S-Unitary	Terminal cover for the S-version of the unitary controller (sold in pack of 10)
10BASE-T1L-ADAPT-0	IP-T1L single pair media adapter that allows converting 10BASE-T traffic to 10BASE-T1L (without power supply)
SCRW-TB-UNI-L	Set of removable terminal blocks covering all models of Unitary controllers
IO-JUMPER-4-10	4-pin relay output Jumper Bar to connect 4 relays IN terminals (sold in pack of 10)
IO-4UIO-S-S	I/O Expansion Module with 4 universal inputs/outputs, Panel Bus and Modbus RTU protocols, and screw terminal blocks
IOD-4UIO-S-S	I/O Expansion Module with 4 universal inputs/outputs, LCD display with Hand-Off-Auto digital functionality, Panel Bus and Modbus RTU protocols, and screw terminal blocks
IO-8UIO-S-S	I/O Expansion Module with 8 universal inputs/outputs, Panel Bus and Modbus RTU protocols, and screw terminal blocks
IOD-8UIO-S-S	I/O Expansion Module with 8 universal inputs/outputs, LCD display with Hand-Off-Auto digital functionality, Panel Bus and Modbus RTU protocols, and screw terminal blocks
IO-4UIO-S-P	I/O Expansion Module with 4 universal inputs/outputs, Panel Bus and Modbus RTU protocols, and push-in terminal blocks
IOD-4UIO-S-P	I/O Expansion Module with 4 universal inputs/outputs, LCD display with Hand-Off-Auto digital functionality, Panel Bus and Modbus RTU protocols, and push-in terminal blocks
IO-8UIO-S-P	I/O Expansion Module with 8 universal inputs/outputs, Panel Bus and Modbus RTU protocols, and push-in terminal blocks
IOD-8UIO-S-P	I/O Expansion Module with 8 universal inputs/outputs, LCD display with Hand-Off-Auto digital functionality, Panel Bus and Modbus RTU protocols, and push-in terminal blocks
IO-ADPT-S-2	I/O Wiring Adapters to convert the touch-flake connections of the I/O Expansion Modules to terminal blocks for wiring power to the modules and communications to the Unitary controller (sold in pack of 2
ENDCOVER-10	Protective End Cover to cover the power and communications touch flake connections of the I/O Expansion Modules. The Protective End Cover has a built in end of line resistor to terminate the Modbus RTU or Panel Bus (sold in pack of 10).
IO-HOT-SWP-70-10	I/O Hot Swap Base for I/O Expansion Modules size 4.13" (105 mm). Sold in pack of 10

DIMENSIONS AND WEIGHTS

LARGE HOUSING

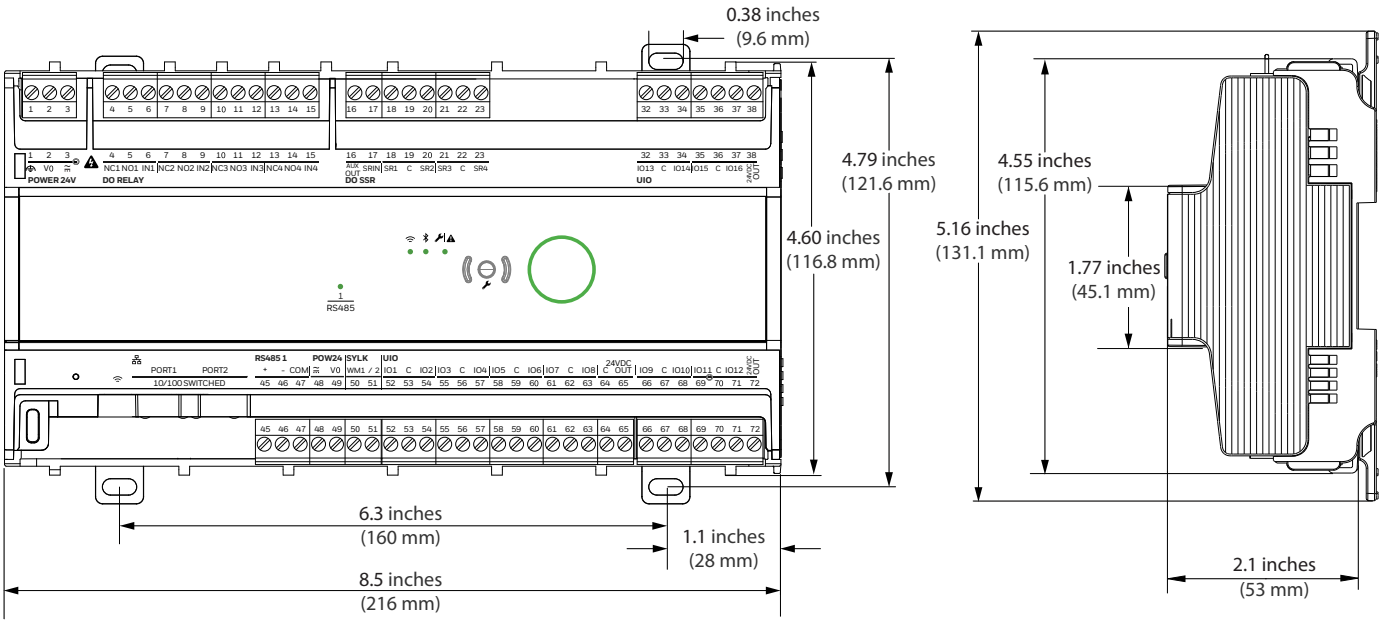

SMALL HOUSING

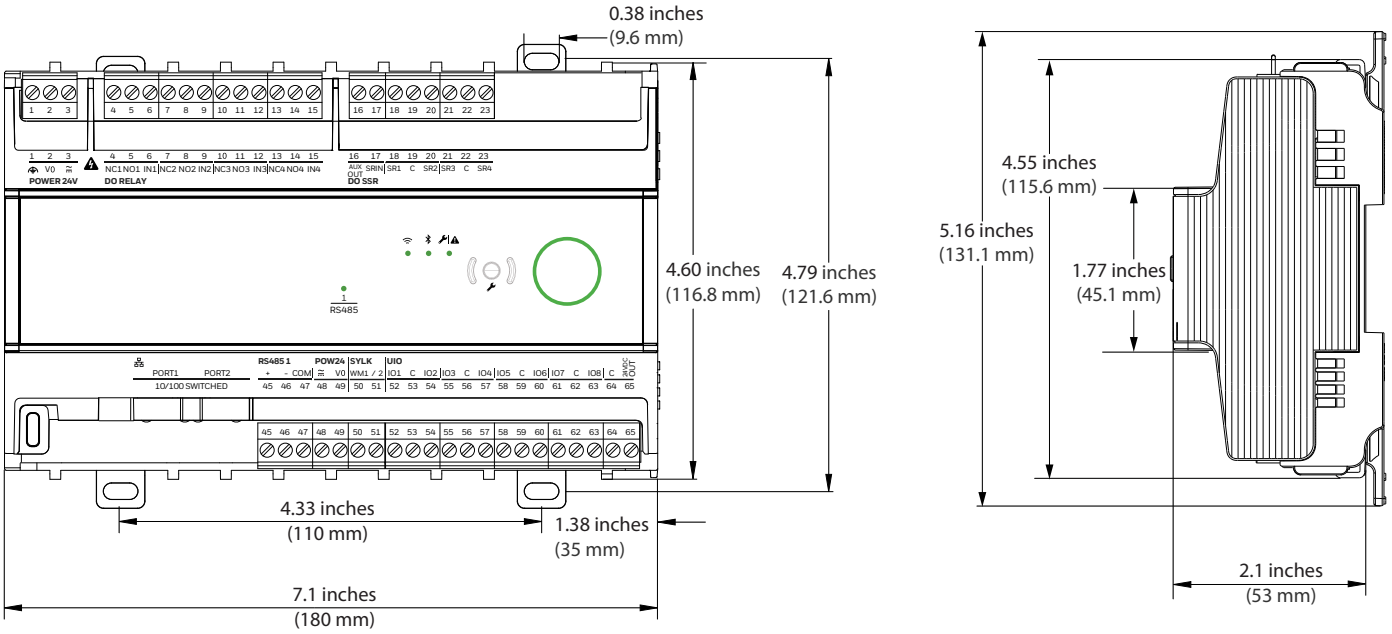

All dimensions are in inches (mm).

WEIGHT AND DIMENSIONS	
PARAMETER	**SPECIFICATION**
Dimension (L x W x H)	Large - 8.5 x 4.79 x 2.1 inches (216 x 121.6 x 53 mm) Small - 7.1 x 4.79 x 2.1 inches (180 x 121.6 x 53 mm)
Weight	Large - 1.256 lbs. (570 g) Small - 1.064 lbs. (483 g)
Mounting	Mounting in fuse boxes (DIN43880), on DIN rails or surface mounted with optional protection covers.

HARDWARE OVERVIEW

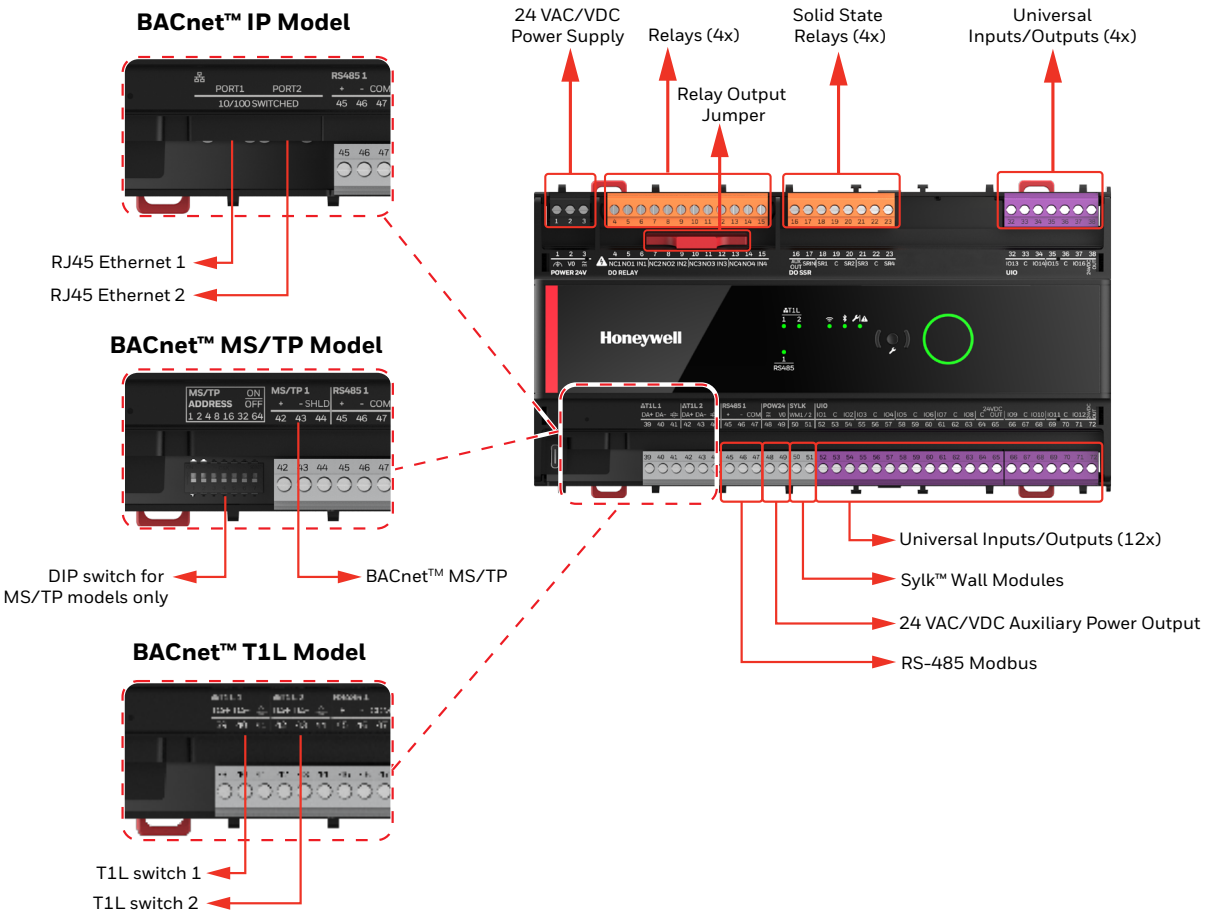

SYSTEM OVERVIEW

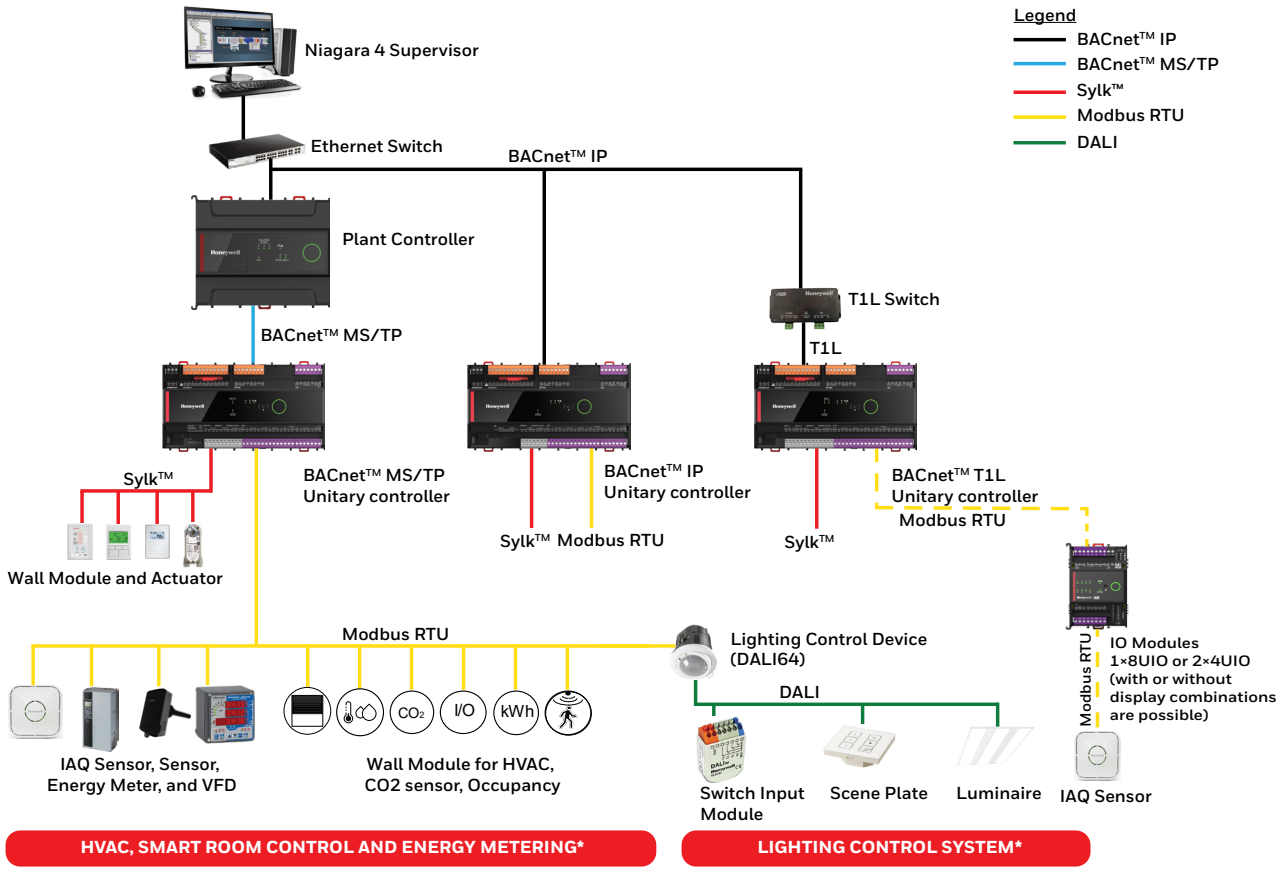

* Devices subject to local availability. Contact your local sales representative for information on available devices in your region.

Note: Image for illustration purposes only, please refer to the Installation Instructions Manual of each device for full integration, network, and topologies supported and requirements.

PRODUCT SPECIFICATION

HARDWARE	
PARAMETER	**SPECIFICATION**
CPU	Crossover processor NXP I.MRT, Cortex M7
Memory capacity	16 MB QSPI Flash, 16 MB SDRAM
Ethernet	BACnet™ IP: 2 x RJ-45 Ethernet ports with a protection that allows loop topology to continue the communication with other controllers even if one node fails, when used with an RSTP supporting device.
Real Time Clock	24 hours backup after power failure After 24 hours, the time will reset to factory default time until the user performs a BACnet™ Time Sync.
Small LEDs	Transmission or reception of communication signal (green).
Large LEDs	Controller status (green, yellow and red).

ELECTRICAL		
PARAMETER	**SPECIFICATION**	
Rated Input Voltage	20 - 30 VAC / 24 - 30 VDC	
Nominal Power Consumption	• BACnet™ IP : 8 VA • BACnet™ MS/TP : 8 VA • BACnet™ T1L : 8 VA	
Full Load Power Consumption (Maximum load including external devices, Sylk™, Communication, Bluetooth Universal IO output, and 24 VDC output, excluding the load on the SSRs and Relays). **Note:** For the current consumption of SSR, refer SSR section table below.	• BACnet™ IP : 30 VA • BACnet™ MS/TP : 30 VA • BACnet™ T1L : 30 VA	
Frequency Range	50 - 60 Hz	
Auxiliary Power Output	Large	1 x 24 VAC/VDC at 300 mA 3 x 24 VAC/VDC at 75 mA
	Small	1 x 24 VAC/VDC at 300 mA 1 x 24 VAC/VDC at 75 mA
Impulse Voltage	330 VAC	
Type of loads	Resistive or inductive loads	
Material group	IIIb	
Classes of control function	Class A control	
Type of Output Waveform	Sine wave or DC voltage	

SUPPORTED DEVICES	
Sylk™ wall modules	TR42, TR42-H, TR42-CO2, TR42-H-CO2, TR71, TR71-H, TR75, TR75-H, TR75-HE, TR120 (TR75-E), and TR120-H (emulation mode only).
Sylk™ Sensor	TR40, TR40-H, TR40-CO2, TR40-H-CO2, TR50, C7400S
Sylk™ Actuators	MS3103, MS3105, MS3110, and MS3120
Non Sylk™ Actuators	MS4103, MS4105, MS7403, MS7405, MS7503, MS7505, MS8103, and MS8105
Hardwired wall modules	TR21, TR22, TR23, TR24, T7460 A, B, C, D, E, F and T7770 A, B, C, D, E, F, G
Modbus devices	Honeywell Modbus devices (for example DALI64MDPSUF/S, TR50, TR80, TR100, SmartVFD HVAC2 drives, 3G SmartVFD drives, IO-8UIO-S-S, IO-8UIO-S-P, IOD-8UIO-S-S, IOD-8UIO-S-P, IO-4UIO-S-S, IO-4UIO-S-P, IOD-4UIO-S-S, and IOD-4UIO-S-P, HSCM sensors, HSCD sensors, AQS-DM sensor, IAQ multi-sensor, WTS3 series, WTS6 series VFD variable frequency drives, E-Mon sub-meters, TB3 thermostats). Other manufacturer Modbus RTU devices supported.
Expansion I/O Modules	Honeywell expansion I/O modules IO-8UIO-S-S, IO-8UIO-S-P, IOD-8UIO-S-S, IOD-8UIO-S-P, IO-4UIO-S-S, IO-4UIO-S-P, IOD-4UIO-S-S, and IOD-4UIO-S-P are supported. (only one model of the 8UIO module or two models of the 4UIO modules can be supported per Optimizer Unitary controller). Requires N4.15u1 or later.

Note: Third Party Modbus RTU devices (Modbus RTU devices from other manufacturers) might require an additional licensing available for purchasing, please refer to the Third Party Modbus Licensing section on page 7. Honeywell Modbus RTU devices do not need a purchased license to communicate with the Optimizer Unitary controller.

SOLID STATE RELAY (SSR)
SSR works with maximum 24 VAC / VDC.
1.5 A constant current across all 4 outputs; 3.5 A inrush for 0.1 seconds per SSR output.
Factory installed jumper between 24 VAC or 24 VDC supply and SSR input shared by all SSRs.
The fuse should be 5 A, for example, 0AGC005.V, OAGW005.VP or BK/AGW-5, and the fuse holder, for example, 150603 or BK/HRK-R.
Type 1

OPERATIONAL ENVIRONMENT	
PARAMETER	**SPECIFICATION**
Storage Temperature	-40 °F to 150 °F (-40 °C to 66 °C)
Operating Temperature	-40 °F to 122 °F (-40 °C to 50 °C)
Humidity	5 % to 95 % RH., non-condensing
Protection	IP20, NEMA 1
Pollution Level	2

WIRE GAUGE RANGE	
PARAMETER	**SPECIFICATION**
SSR output and SRIN	22-18 AWG
Relay	18-14 AWG

PRODUCT SPECIFICATION

RELAYS	
PARAMETER	**SPECIFICATION**
Contact Rating	Up to 277 VAC / 230 VAC (+20 %).
	3 contacts per relay (normally open (NO), normally closed (NC), common (IN)).
	10 A constant current on normally open (NO) contact and 100 A inrush for 100 ms.
	Total current across all relays is limited to 12 A if all commons are connected via a relay jumper.
Output	240/277 VAC, 50/60 Hz, or 24 VDC, 12 A Max. total common (10 A Max. per Relay)
Number of Automatic Cycles	40000 cycles for contact A (NO) 6000 cycles for contact C (CO)
Type of disconnection or interruption provided by each circuit.	
Relay outputs can be used as dry contact output.	
Type 1.C	

UNIVERSAL IO	
PARAMETER	**SPECIFICATION**
AI	16-bit A/D resolution • 0(2)...10 VDC direct/reverse or 0(4)...20 mA input. • Sensors: 10K Ohm NTC Type II, 10K Ohm NTC Type III, 10K3A1, 20K Ohm NTC, PT100, PT1000, NI1000TK5000, NI1000 Class B DIN43760, PT3000, 100 Ohm to 100K Ohm resistive (custom characteristic). • Hardwired wall modules: space temperature, space temperature setpoint, fan speed override, occupancy mode override.
BI	• Dry contact binary input with direct/reverse. • Pulse input with maximum frequency 100 Hz, minimum pulse width 5 ms. Compatible with the S0 interface for pulse counters.
AO	• Voltage output with 0(2)...11 VDC direct/reverse with -3 mA ...+20 mA. • Current output with 0(4)...20 mA direct/reverse. • Hardwired wall modules: LED Control.
DO	0...10 VDC at 20 mA binary output with direct/reverse.

COMMUNICATION	
PARAMETER	**SPECIFICATION**
Protocol supported	• BACnet™ IP (RJ45, T1L) • BACnet™ MS/TP* • Modbus RTU (Modbus client, Modbus application protocol specification V1.1b3) • Bluetooth (Optional)
IP Addressing Modes	• Dynamic: DHCP and Link-local • Static: Assigned
Sylk™	2-wire, polarity-insensitive
*Auto Baud rate detection is provided only for the BACnet™ MS/TP controllers.	

STANDARDS AND APPROVALS
CE mark
BACnet™ BTL®-Listed; IP, T1L and MS/TP Unitary models as BACnet™ Advanced Application Controller (B-AAC).
UL 916
UL/ULC 60730-1
FCC/IC Product Class B
Plenum tested (according to UL 2043)

UIO OUTPUT TYPE VS LOAD	
OUTPUT TYPE	**LOAD**
0 to 10 VDC, 20 mA max.	≥ 1k ohm
4 to 20 mA	≤ 550 ohm

T1L COMMUNICATION	
PARAMETER	**SPECIFICATION**
10BASE-T1L Standard	802.3cg-2019
Connection	Screw terminal, auto MDI-X, polarity detection and auto correction.
Cable type	Single twisted pair balanced, 18AWG, shielded or unshielded. An Ethernet CAT 5/6 UTP cable can be supported, use only 1 twisted pair from the 4 pairs. Belden 74040NH, 9841NH or equivalent. 18 AWG, 1 twisted pair (2 conductors, solid or stranded together), Nominal Voltage/Voltage Rating: 300 V, Characteristic Impedance: 100 Ohm ± 20 %, Max. conductor resistance: 6.7 Ohms per 1000 ft ± 10 % (22 Ohms/km ± 10 %), Max. Capacitance core-to-core: 12-18 pF/ft + 5 % (40-60 nF/km + 5 %).
Distance	Maximum 984 ft. (300 m) to Honeywell T1L controller in daisy chain. Maximum 2,952 ft. (900 m) to any other T1L device without a daisy chain.
Transmission rate	10 Mbps

PRODUCT SPECIFICATION

I/O EXPANSION MODULES	
PARAMETER	**SPECIFICATION**
Supported I/O Expansion Modules	The Optimizer Unitary controllers support I/O Expansion Modules via Modbus RTU communication through the RS-485 port to add up to a maximum of 8 additional universal input/output control points per controller. Supported I/O Expansion modules: IOD-8UIO-S-S, IOD-8UIO-S-P, IO-8UIO-S-S, IO-8UIO-S-P, IOD-4UIO-S-S, IOD-4UIO-S-P, IO-4UIO-S-S, and IO-4UIO-S-P. Refer to the I/O expansion configurations parameter for allowed configurations. Supported only with N4.15u1 or later.
Supported Controllers	Optimizer Unitary controllers with 24 on-board control points (large housing models) and Optimizer Unitary controllers with 16 on-board control points (small housing models): UN-RS0844ES24NMC, UN-RS0844ESB24NMC, UN-RS0844MS24NMC, UN-RS0844MSB24NMC, UN-RS0844TS24NMC, UN-RS0844TSB24NMC, UN-RL1644ES24NMC, UN-RL1644ESB24NMC, UN-RL1644MS24NMC, UN-RL1644MSB24NMC, UN-RL1644TS24NMC, and UN-RL16844TSB24NMC.
Maximum allowed I/O expansion points	8 additional universal input/output points (UIO) per controller (1 × 8 UIO or up to 2 × 4 UIO). Refer to the I/O expansion configurations below for allowed I/O Expansion Modules configurations.
I/O expansion configurations	Only one of the possible configurations of I/O Expansion Modules listed below is allowed to use per Optimizer Unitary controller: • 1 × IOD-8UIO-S-S or 1 x IOD-8UIO-S-P • 1 × IO-8UIO-S-S or 1 x IO-8UIO-S-P • Up to 2 × IOD-4UIO-S-S or up to 2 x IOD-4UIO-S-P • Up to 2 × IO-4UIO-S-S or up to 2 x IO-4UIO-S-P • (1 × IO-4UIO-S-S) + (1 × IOD-4UIO-S-S) or (1 x IO-4UIO-S-P) + (1 x IOD-4UIO-S-P) or (1 x IO-4UIO-S-S) + (1 x IOD-4UIO-S-P) or (1 x IO-4UIO-S-P) + (1 x IOD-4UIO-S-S))
Communication protocol	Modbus RTU (Modbus application protocol specification V1.1b3)
Protocol Configuration	Each I/O Expansion Module is equipped with a Protocol DIP switch selector (4 bit) to change between factory default Honeywell PanelBus protocol to Modbus RTU protocol. To configure the I/O Expansion module to Modbus protocol change the DIP switch positions to the Modbus setting below: Modbus setting: Switch 1 = ON; switches 2, 4, and 8 = OFF

THIRD PARTY MODBUS LICENSING	
PARAMETER	**SPECIFICATION**
Modbus licensing	Modbus licensing applies per controller and to Optimizer Unitary controllers manufactured with date code of 2631 or later, and only when Third Party Modbus devices (devices not manufactured or branded by Honeywell) are connected to the Modbus RS485 port of the unitary controller, and when more than one Third Party Modbus device is connected to the controller, or more than 25 Modbus reading registers are required to be read from Third Party Modbus devices, or any Modbus writing register is required to be written to any Third Party Modbus device. Use the decision tree workflow below as a quick guide to confirm if your controller will require a Third Party Modbus device license. Refer to the licensing options section below for licensing part numbers and license limits.
Honeywell devices (no license required)	The following devices are auto detected by the controller as Honeywell Modbus devices and do not require a license: TR50, TR100, IO-4UIO-S-S, IOD-4UIO-S-S, IO-8UIO-S-S, IOD-8UIO-S-S, IO-4UIO-S-P, IOD-4UIO-S-P, IO-8UIO-S-P, and IOD-8UIO-S-P.
Honeywell devices that require a license free of charge	The following devices cannot be auto detected by the Optimizer Unitary controller but are Honeywell Modbus branded devices which a free of charge license can be provided by Honeywell: DALI64MDPSUF/S, TR80, SmartVFD HVAC2 drives, 3G SmartVFD drives, HSCM sensors, HSCD sensors, AQS-DM sensor, IAQ multi-sensor, WTS3 series, WTS6 series, E-Mon sub-meters, TB3 thermostats, and any other Honeywell branded Modbus device recognized by Honeywell which has not been listed.
Factory Third Party Modbus Licensing*	Each Optimizer Unitary controller comes with a Third Party Modbus licensing from factory which allows the controller to communicate with only one Third Party Modbus device with the following limitations per controller: 1 Modbus Third Party device, with 25 Modbus reading registers (16-bit, 1 Modbus point = 1 Modbus register; 32-bit, 1 Modbus point = 2 Modbus registers) and 0 Modbus writing registers. For more Third Party Modbus devices, more reading points, or any writing point a license is required per controller. Refer to the licensing options section below for licensing part numbers.
Licensing options	Choose one of the following Third Party Modbus licensing options. Only one license per controller can be applied: • UNI-MOD-2: Third Party Modbus license with 25 writing registers, 130 reading registers, and up to 2 Modbus Third Party devices. • UNI-MOD-4: Third Party Modbus license with 25 writing registers, 130 reading registers, and up to 4 Modbus Third Party devices. • UNI-MOD-6: Third Party Modbus license with 25 writing registers, 130 reading registers, and up to 6 Modbus Third Party devices. • UNI-MOD-2-READ: Third Party Modbus license with 155 reading registers, 0 writing registers, and up to 2 Modbus Third Party devices. • UNI-MOD-4-READ: Third Party Modbus license with 155 reading registers, 0 writing registers, and up to 4 Modbus Third Party devices. • UNI-MOD-6-READ: Third Party Modbus license with 155 reading registers, 0 writing registers, and up to 6 Modbus Third Party devices. **Note:** For 16-bit Modbus, 1 register = 1 Modbus point. For 32-bit Modbus, 2 registers = 1 Modbus point. Typically Modbus data type for decimals, floats, and large counters use 2 Modbus registers per Modbus point.
License grace period	When a Third Party Modbus license is required, each unitary controller offers a 30-day grace period to activate the license in the controller. During the grace period full operation, communication, and programming is allowed. Once the grace period finishes, the controller will request to activate the license. The 30-day grace period starts with the first teach to the unitary controller.
*The Third Party Modbus licensing applies per controller and can be stacked to increase licensing devices or points in the controller with the maximum limitation of 25 writing registers, 130 reading registers, and 6 third party Modbus devices per controller. Once licensed, the factory limits are overridden, and the new Third Party Modbus limits are determined by the license applied to the controller. The licenses cannot be shared between controllers. Once applied the controller holds its licensing even after a factory reset is performed. A purchasing order and the licensing file must be provided to Honeywell to provide a license key file required to apply the Third Party Modbus licensing in the controllers.	

PRODUCT SPECIFICATION

THIRD PARTY MODBUS LICENSING DECISION TREE GUIDE FOR OPTIMIZER UNITARY CONTROLLERS

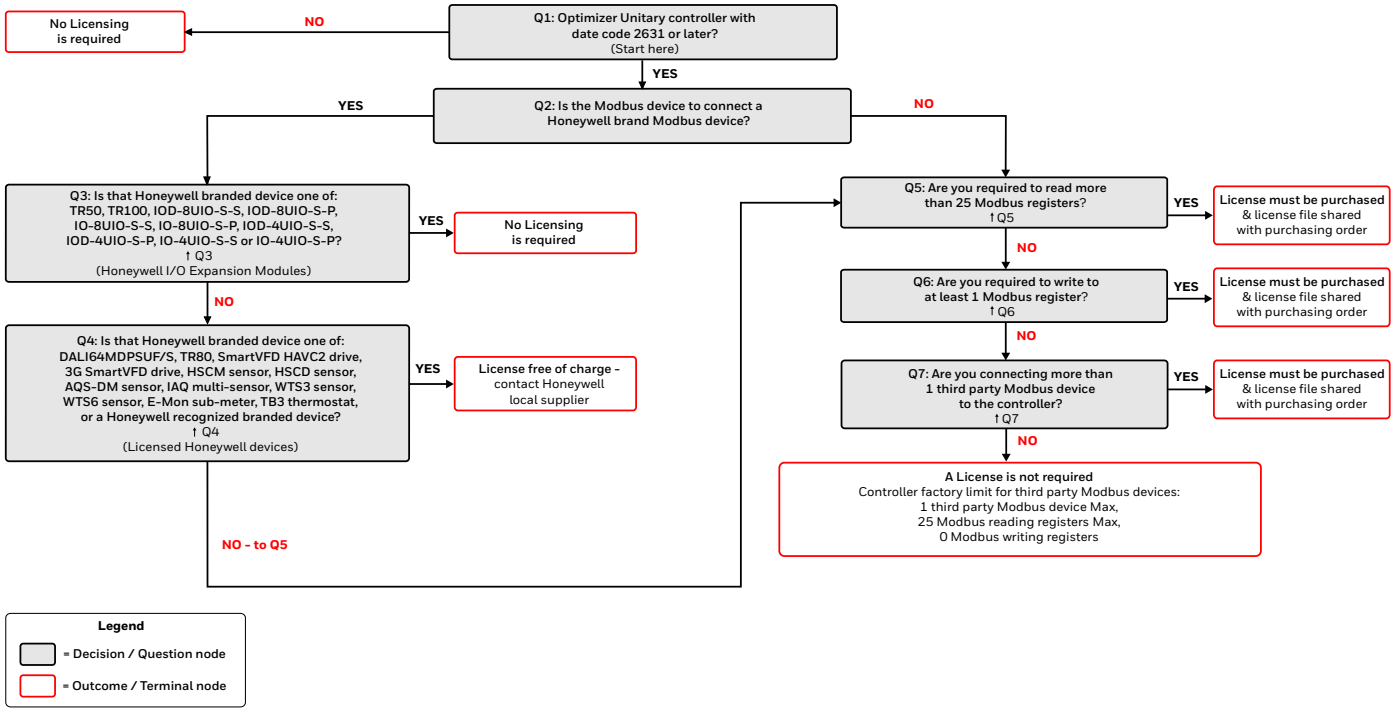

RECOMMENDED APPLICATIONS

The Honeywell Optimizer Unitary controllers had been designed mainly for but not limited to HVAC unitary control applications such as rooftop units (RTUs), air handling units (AHUs), heat-pump units, fan and coil units, dedicated outdoor air units (DOAS), energy recovery ventilation units (ERVs), ceiling fans, ventilation units, fans, chilled-beams, heaters, exhausts fans, HVAC water valves, pumping stations. Although Honeywell Optimizer Unitary controllers are flexible and fully freely programmable, Honeywell does not recommend using them for any critical equipment control, redundancy, chiller plant control, or boiler plant control applications.

By using this Honeywell literature, you agree that Honeywell will have no liability for any damages arising out of your use or modification to, the literature. You will defend and indemnify Honeywell, its affiliates and subsidiaries, from and against any liability, cost, or damages, including attorneys' fees, arising out of, or resulting from, any modification to the literature by you.

Honeywell | Building Automation
Building 5 Carlton Park, King Edward Avenue, Narborough, Leicester LE19 0LF, United Kingdom

Honeywell | Building Automation
715 Peachtree Street NE
Atlanta, Georgia 30308, USA

Honeywell GmbH
Hanns-Klemm-Str. 5
71034 Boblingen, Germany
buildings.honeywell.com

@U.S. Registered Trademark
© 2026 Honeywell International Inc
31-00613-01 | Rev. 06-26