Field Devices

Honeywell

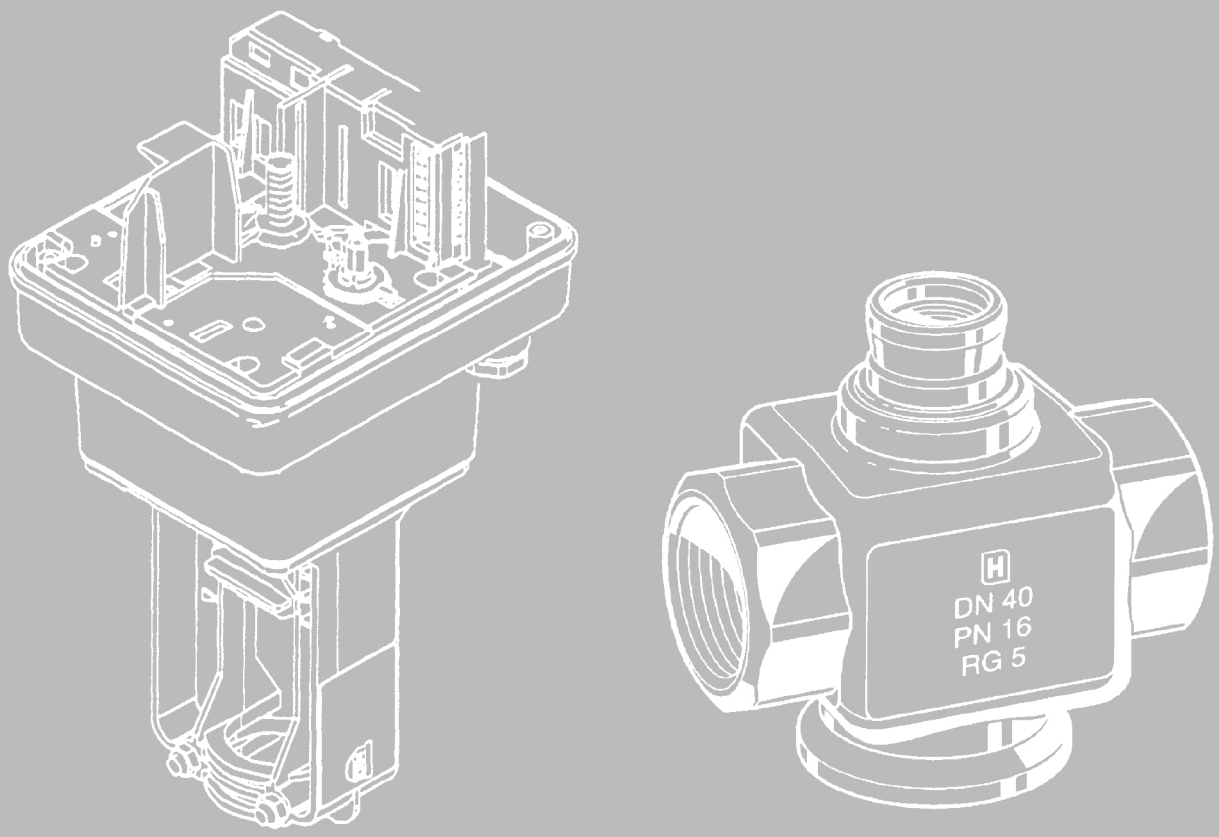

Spare Parts Catalog 2018

Linear Valves

M6410C/M7410C	Small Linear Valve Actuator	4
ML6420A / ML7420A	Electric Linear Actuator	5
ML6425 A,B / ML7425A,B	Electric Linear Actuator	6
ML6421A,B / ML7421A,B	Electric Linear Actuator	7
MP953 B,D	Pneumatic Actuator	8
MP953 A,C	Pneumatic Damper Actuator	9
MP904 A,B,C,D	Pneumatic Damper Actuator	10
PP907A	Pressure Reducing Station	11

Linear Valves

V5011R/S	2-Way Large Linear Valve	14
V5049A/B	2-Way Large Linear Valve	15
V5328A	2-Way Large Linear Valve	16
V5016A / V5025A	2-Way Large Linear Valve	17
V5013R/E	3-Way Large Linear Valve	18
V5015A, V5329A/C	3-Way Large Linear Valve	19
V5050A/B	3-Way Large Linear Valve	20
V58...2A, V58...3A/C	2/3-Way Small Linear Valves	21
V5825B	2-Way Small Linear Valve	22
V5872B	2-Way Small Linear Valve	23
	Spare Gaskets for Valve Fittings	24

Rotary Valves & Actuators

M6061A,L	Electric Rotary Actuator	26
DR, DRK, ZR, ZRK	Rotary Valve Linkage	27
DR / ZR	3/4-Way Rotary Valves	28
V5433A,G / V5442A,G	3-Way Compact Rotary Valve	29
DRU / HE	3-Way Rotary Valve	30

Wall Modules

	Sets for T7460/T7560/T7270	32

Variable-Frequency Drives

	Variable Frequency Drives	34

Note: The shown spare parts are partially requiring special tools and expert knowledge while its assembly. There is not given always an instruction which can cause serious difficulties when the spares are wrongly used.

Honeywell

Linear Actuators

Electric Linear Actuators
Pneumatic Actuators
Pneumatic Damper Actuators

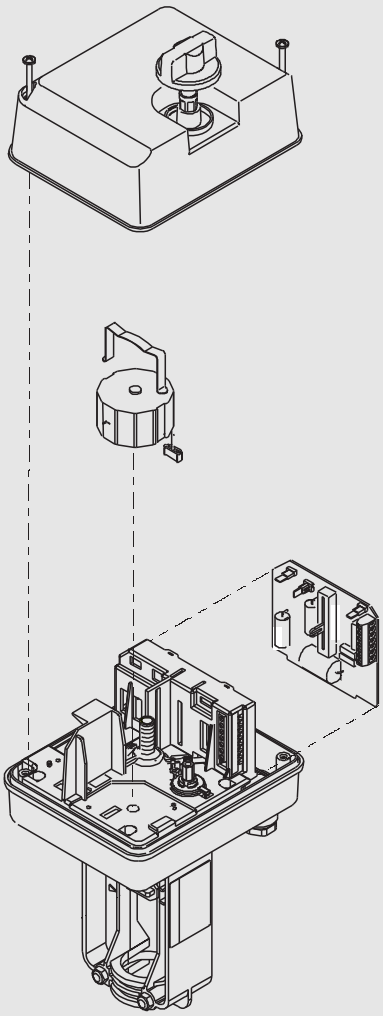

M6410C/M7410C

Small Linear Valve Actuator

Adapter Ring, 1.5 mm, for use with 8 mm valves.
Order-Number: 0903403

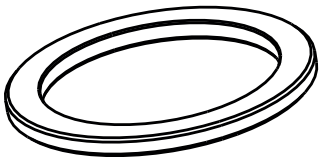

ML6420A / ML7420A

Electric Linear Actuator

Spare Parts

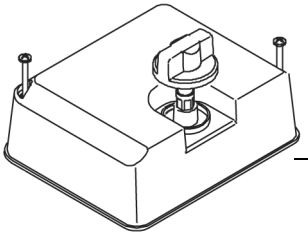

		ML6420				ML7420							
	Honeywell	A3007	A3015	A3023	A3072	A3006	A3014	A3071	A6009	A6017	A6025	A6033	A6041
Description	Order-Number												
Cover	43193811-001	•	•	•		•	•		•	•		•	•
	43193812-001				•			•			•		

ML6425A,B / ML7425A,B

Electric Linear Actuator

Spare Parts

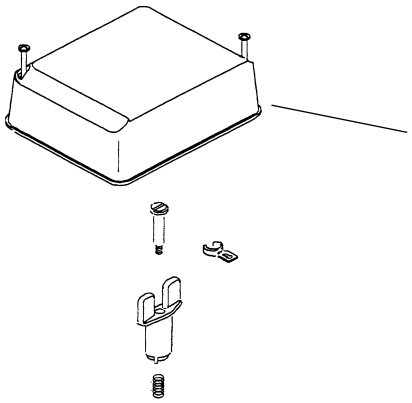

		ML6425						ML7425					
	Honeywell	B3021	A3006	B2015	A3014	B2023	B3005	A3005	B3004	A6008	A6016	B6007	B6015
Description	Order-Number												
Cover	43193812-001	•	•		•		•	•	•	•	•	•	•

ML6421A,B / ML7421A,B

Electric Linear Actuator

Spare Parts

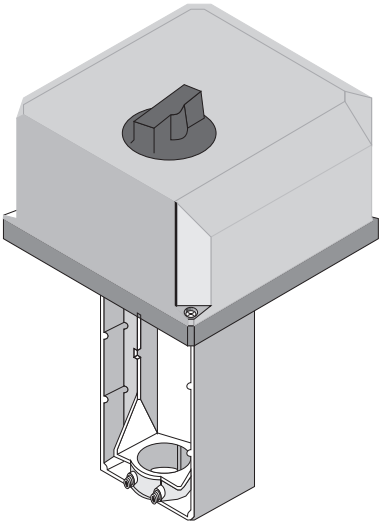

		ML6421				ML7421		
	Honeywell	A3005	A3013	B3004	B3012	A3004	B3003	
Description	Order-Number							
Motor Assy.	K43196140-005	•		•		•	•	
	K43196140-004		•		•			
Circuit-Board Assy.	K43196130-001	•		•				
	K43196131-001		•		•			

for actuators with DC <4611 both Motor & Circuit-Board Assy. has to be changed

MP953B,D

Pneumatic Actuator

Spare Parts

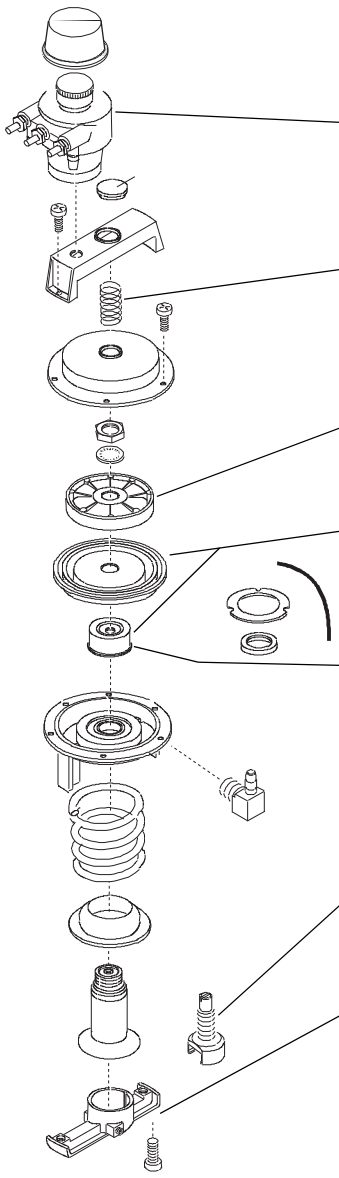

		MP953		
	Honeywell	B5003	D5009	D5025
Description	Order-Number			
Relay Assy.	K43170625-002	•		
Spring	K43313919-010 (10 pcs)	•		
Cup	S43312199-001	•	•	•
Diaphragm and Sleeve	R43180626-001	•	•	•
Sleeve	R43161322-001	•	•	•
Yoke Assy. incl. Fixing Washers	R43169695-001	•	•	•
Base Assy.	K43165638-001	•	•	•

MP953A,C

Pneumatic Damper Actuator

Spare Parts

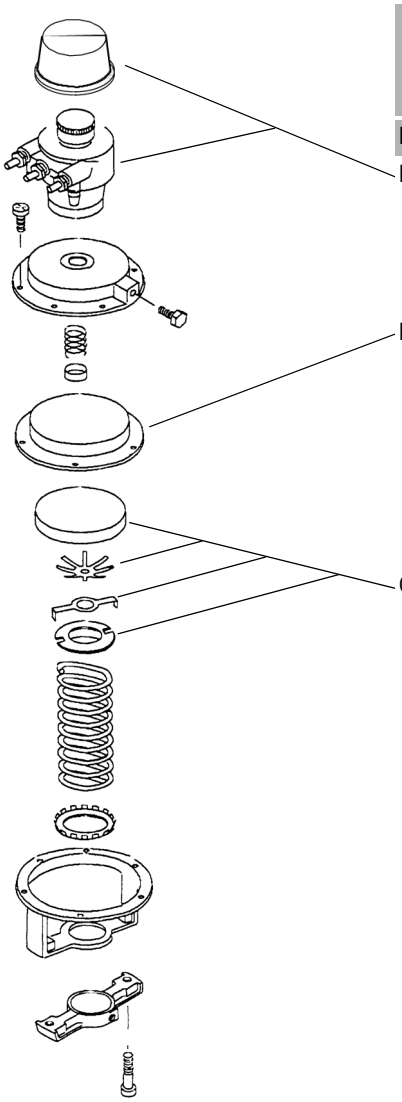

		MP953										
	Honeywell	A5005	A5039	A5054	C5001	C5019	C5027	C5068	C5076	C5084	C5142	C5159
Description	Order-Number											
Relay Assy.	K43170625-001	•	•	•								
Diaphragm	R43312760-001	•			•	•	•					
	R43161319-001		•					•	•	•		
	R43161320-001			•							•	•
Cup Assy.	K43309284-001	•			•	•	•					
	K43311749-001		•					•	•	•		
	K43170643-001			•							•	•

MP904A,B,C,D

Pneumatic Damper Actuator

Spare Parts

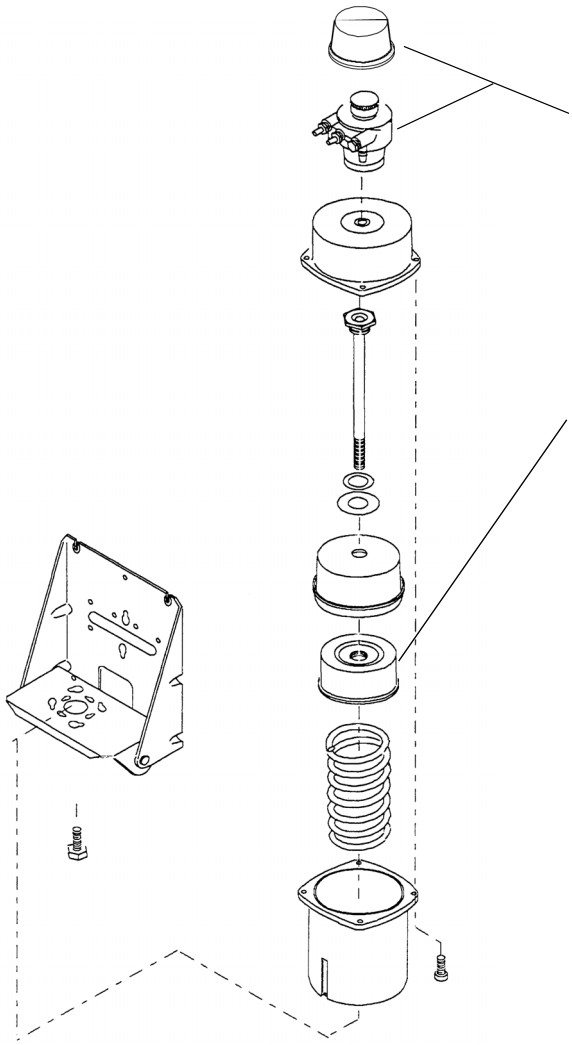

		MP904								
	Honeywell	A5047	B5037	B5052	C1018	C1026	D1008	D1032	D1040	D1057
Description	Order-Number									
Relay Assy.	K43170625-003	•			•	•				
Diaphragm	R43313917-001	•	•	•						
	R43175995-001				•	•	•	•	•	•

PP907A

Pressure Reducing Station with Sub-Micron-Filter

Spare Parts

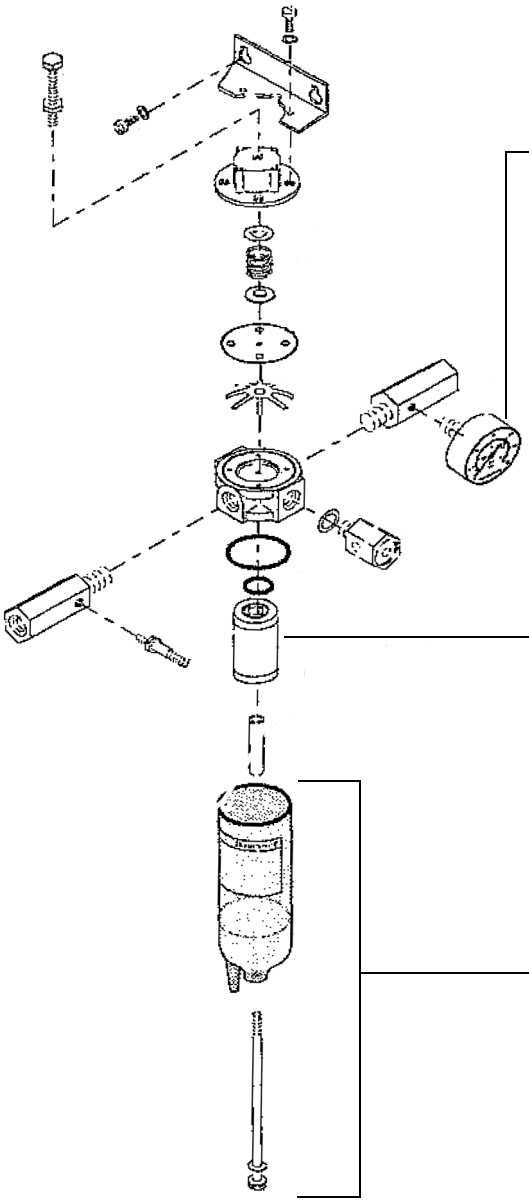

		PP907		
	Honeywell	A1008		
Description	Order-Number			
Pressure gauge 0...2 bar	43191145-001	•		
Filter-Element Assy.	R43165210-002	•		
Filter Bowl Assy.	K43175081-001	•		

Honeywell

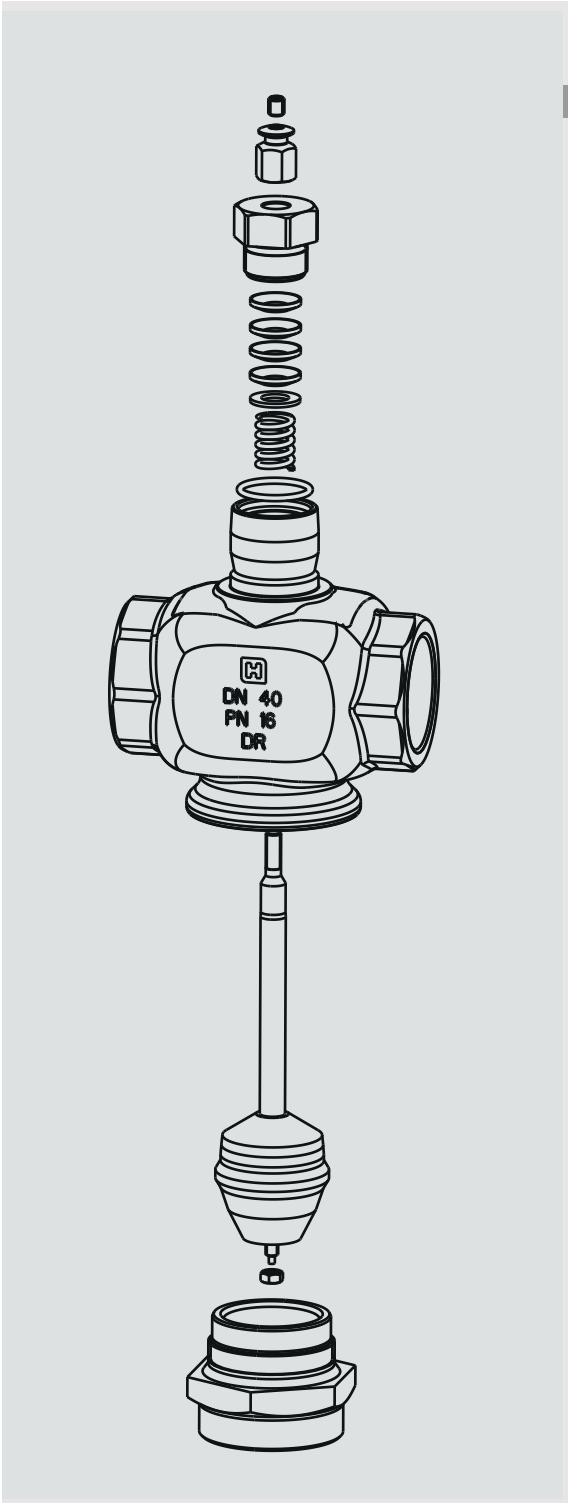

Linear Valves

2-Way Large Linear Valves
3-Way Large Linear Valves
2/3-Way Small Linear Valves
Accessories

V5011R/S

2-Way Large Linear Valve
PN 16

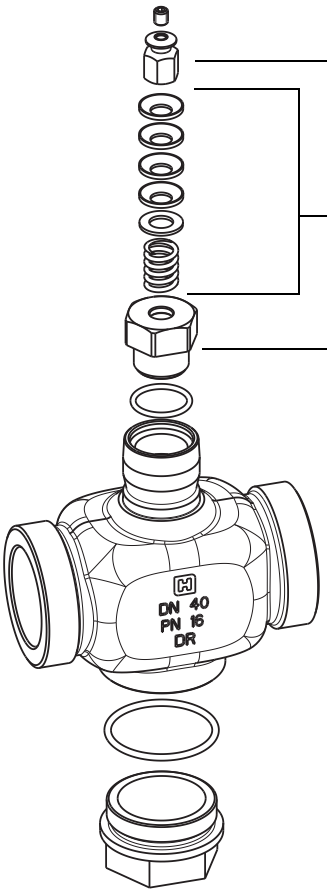

Description	Valve size	Order-Number
Stem button assy (10 units)	DN 15–50	K43175080001
Packing kit (date code ≥ 0301)	DN15–50	R43176754002
Packing nut (date code ≥ 0301)	DN 15–50	0903835

V5049A/B

2-Way Large Linear Valve
PN 16/25/40

Spare parts

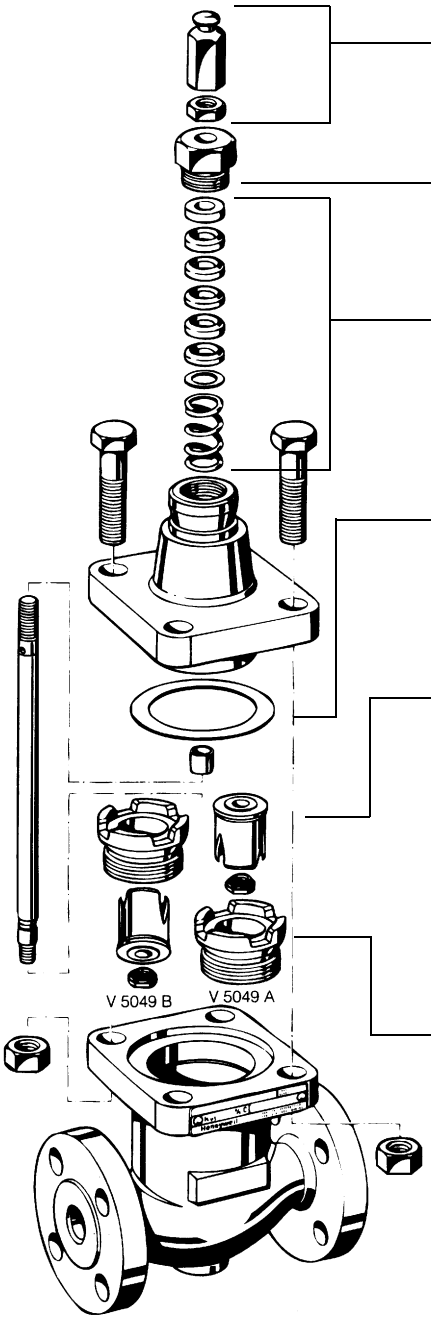

Description	Valve size	Order-Number
Stem button assy (10 units)	DN 15–65	K43175080002
	DN 80–150	K43175080005
Packing nut	DN 15–65	S43297006001
	DN 80–150	S43297992001
Packing kit	DN 15–65 (Ø 10 mm)	R43176755004
	DN 80–150 (Ø 16 mm)	R43176755005
Body gasket (10 units)	DN 40–65	K43188174002
	DN 80–100	K43188174003
	DN 125 and 150	K43188174004
Plug assembly (valve stem, plug, body gasket, rivet or locking nut)	k_{vs} 25	K43298806001
	k_{vs} 40	K43298817001
	k_{vs} 63	K43298824001
	k_{vs} 100	K43298836001
	k_{vs} 160	K43298851001
	k_{vs} 250	K43299007001
	k_{vs} 360	K43299020003
Seat ring	k_{vs} 63	S43297102001
	k_{vs} 100 and 160	S43161910001
	k_{vs} 250 and 360	S43297991001

V5328A

2-Way Large Linear Valve
PN 16

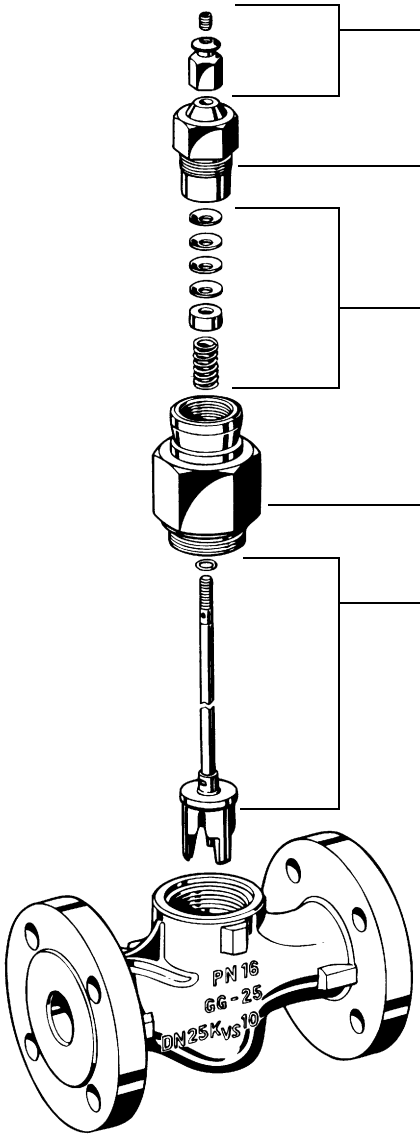

Description	Valve size	Order-Number
Stem button assy (10 units)	DN 15–32	K43175080001
	DN 40–80	K43175080002
Packing nut	DN 15–32	S310509D
	DN 40–80	S298562
Packing kit	DN 15–32 (Ø 6.35 mm)	R43176754001
	DN 40–80 (Ø 10 mm)	R43176754002
Bonnet		
Plug assembly (valve stem, plug and O-ring)	k_{vs} 25	K43194032012
	k_{vs} 40	K43194032013
	k_{vs} 63	K43194032014
	k_{vs} 100	K43194032015
	k_{vs} 160	K43194032016
	k_{vs} 250	K43194032017
	k_{vs} 360	K43194032018

V5016A / V5025A

2-Way Large Linear Valve
PN 16/25

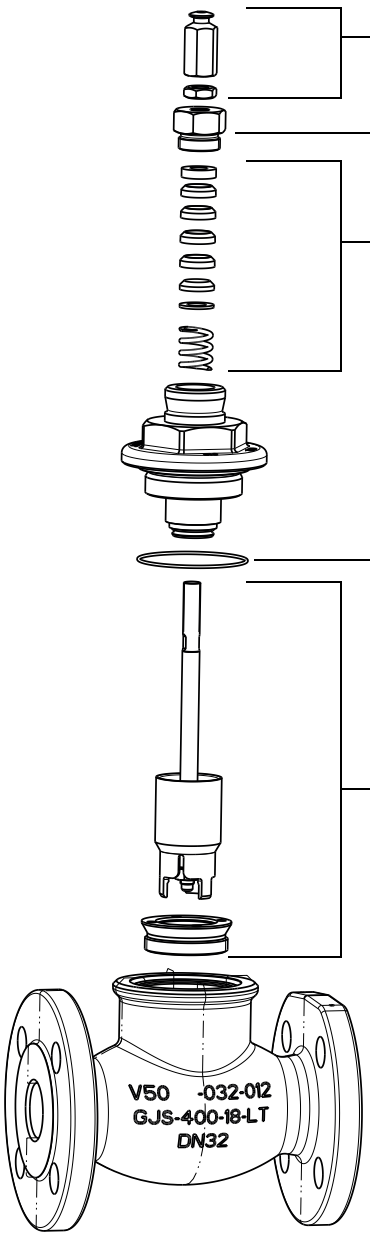

Description	Valve size	Order-Number
Stem button assy (10 units)	DN 15–150	K43175080002
Packing nut	DN 15–80	S43297006001
	DN 100-150	S43297992001
Packing kit	DN 15–80 (Ø 10 mm)	R43176755004
	DN 100–150 (Ø 16 mm)	R43176755005
O-ring (10 units DN 40–50) (5 units DN 65–150)	DN 40	0903836
	DN 50	0903846
	DN 65	0903847
	DN 80–100	0903848
	DN 125–150	0903849
Plug assembly (valve stem, plug, sealing)	k_{vs} 25	0903837
	k_{vs} 40	0903838
	k_{vs} 63	0903839
	k_{vs} 100	0903840
	k_{vs} 160	0903841
	k_{vs} 250	0903842
	k_{vs} 360	0903843

V5013R/E

3-Way Large Linear Valve
PN 16

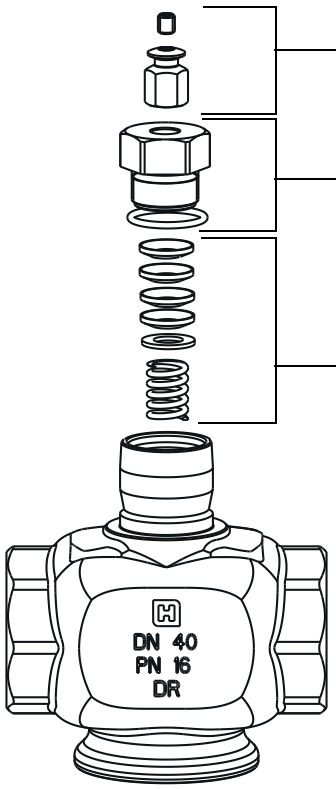

Description	Valve size	Order-Number
Stern button assy (10 units)	DN 15–50	K43175080001
Packing nut		
(date code ≥ 0301)	DN 15–50	0903835
(date code ≤ 0252)	DN 15–32	0901788
	DN 40 and 50	0901789
Packing kit		
(date code ≤ 0252)	DN 15-32	R43176754001
	DN 40 and 50	R43176754002
(date code ≥ 0301)	DN 15–50	R43176754002

V5015A, V5329A/C

3-Way Large Linear Valve
PN 16/6

Spare Parts

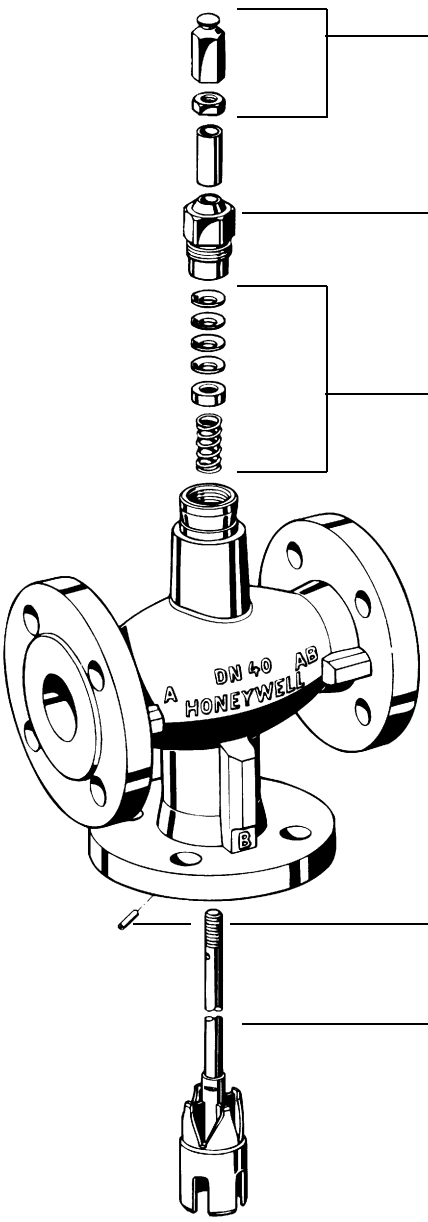

Description	Valve size	Order-Number
Stem button assy (10 units)	DN 15–32	K43175080001
	DN 40–80	K43175080002
	DN 100–150	K43175080006
Packing nut	DN 15–32	S310509D
	DN 40–80	S298562
	DN 100–150	S297827
Packing kit	DN 15–32 (Ø 6.35 mm)	R43176754001
	DN 40–80 (Ø 10 mm)	R43176754002
	DN 100–150 (Ø 12 mm)	R43176754005
Pin stop plug		
Plug assembly (valve stem and plug; DN 100–150 also O-ring and rivet)	k_{vs} 25	K43176799015
	k_{vs} 40	K43176799016
	k_{vs} 63	K43176799017
	k_{vs} 100	K43176799018
	k_{vs} 140	K43297819002
	k_{vs} 220	K43297822002
	k_{vs} 310	K43297825002

V5050A/B

3-Way Large Linear Valve
PN 16/25/40

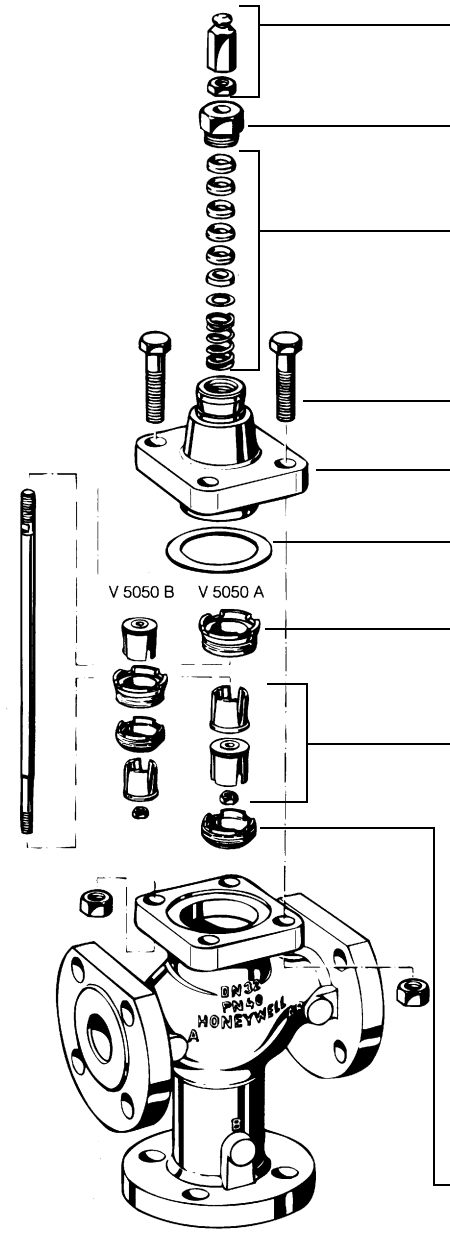

Description	Valve size	Order-Number
Stem button assy (10 units)	DN 15–80	K43175080002
	DN 100–150	K43175080005
Packing nut	DN 15–80	S43297006001
	DN 100–150	S43297992001
Packing kit	DN 15–80 (Ø 10 mm)	R43176755004
	DN 100–150 (Ø16 mm)	R43176755005
Screws (4 pcs)		
Bonnet		
Body gasket (10 units)	DN 15–32	K43188174001
	DN 40–65	K43188174002
	DN 80–100	K43188174003
	DN 125–150	K43188174004
Seat ring	DN 65	S43297102001
	DN 80–100	S43297789001
	DN 125–150	S43297991001
Plug assembly (valve stem, locking nut, body gasket and two plugs)	k_{vs} 25	K43298808001
	k_{vs} 40	K43298819001
	k_{vs} 63	K43298826001
	k_{vs} 100	K298838
	k_{vs} 160	K298853
	k_{vs} 250	K299009
	k_{vs} 360	K43299020002
Seat ring	DN 40	S43298804001
	DN 50	S43298815001
	DN 65	S43298822001
	DN 80–100	S43298834001
	DN 125–150	S43299004001

V58...2A, V58...3A/C

2/3-Way Small Linear Valves
DN 15/20 PN 16

Spare Parts

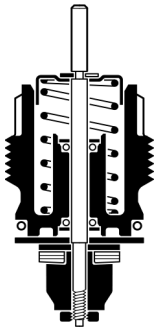

V5812/22/32/52/62A
2-way valve inserts

k_{vs} value	DN	Order-Number
0.16	15	0902812
0.25	15	0902811
0.40	15	0902810
0.63	15	0902809
1.0	15	0902808
1.6	15	0902807
1.6	15	0902813*
2.5	20	0902814
4.0	20	0902815
2.5	20	0902816*

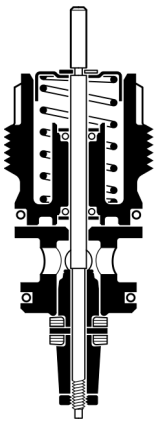

V5813/23/33/53/63A/C
3-way valve inserts

k_{vs} value	DN	Order-Number
0.25	15	0902821
0.40	15	0902822
0.63	15	0902823
1.0	15	0902824
1.6	15	0902825
1.6	15	0902817*
2.5	20	0902818
2.5	20	0902826*[2]
4.0	20	0902819
4.0	20	0902827*[2]
2.5	20	0902820*

*on-off version
*[2] for 180N actuators only

The following valve inserts are interchangeable

Two-way-valves:	**k_{vs} 0.16; 0.25; 0.40 and 0.63**
	k_{vs} 1.0 and 1.6
	k_{vs} 2.5 and 4.0
Three-way-valves:	**k_{vs} 0.25; 0.40; 0.63 and 1.0**
	k_{vs} 2.5 and 4.0

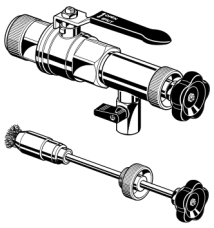

Description	Order-Number
Insert replacement tool	WV108M
Valve seat brush	WV108B

V5825B

2-Way Small Linear Valve
PN 25

Spare Parts

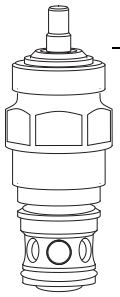

Description	Valve size	Order-Number
Valve insert	k_{vs} 0.25	0903809
	k_{vs} 0.40	0903810
	k_{vs} 0.63	0903811
	k_{vs} 1.0	0903812
	k_{vs} 1.6	0903813
	k_{vs} 2.5	0903814
	k_{vs} 4.0	0903815
	k_{vs} 6.3	0903816
	k_{vs} 10	0903817

V5872B

2-Way Small Linear Valve
PN 16

Spare Parts

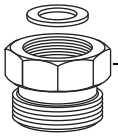

Valve adapter kit

The V5872B has been replaced by the V5825B. To adapt it to the same installation dimensions, please use the appropriate valve adapter kit.
See following list:

Replaced valve	Replacement	Valve size	Order-Number
V5872B1003	V5825B1001	k_{vs} 0.25	AK15-15
V5872B1011	V5825B1019	k_{vs} 0.40	AK15-15
V5872B1029	V5825B1027	k_{vs} 0.63	AK15-15
V5872B1037	V5825B1035	k_{vs} 1.0	AK15-15
V5872B1045	V5825B1043	k_{vs} 1.6	AK15-15
V5872B1052	V5825B1050	k_{vs} 2.5	AK20-15
V5872B1060	V5825B1068	k_{vs} 4.0	AK20-15
V5872B1078	V5825B1076	k_{vs} 6.3	AK25-25
V5872B1086	V5825B1084	k_{vs} 10	n.a.

Spare Gaskets for Valve Fittings

Used in fittings	DN	$Ø_{INNER}$ (mm)	$Ø_{OUTER}$ (mm)	thickness (mm)	Gasket order-no.	pcs.
AC-15FT, AC-15FS	15	13.2	18	1.5	2166600	1
AC-20FT, AC-20FS, ACS-15T, ACS-15W, AK15-15, AK20-15	20	18	24	2	0901443	10
AC15TF	15	20	34	2	n.a.	n.a.
AC-20TF, ACS-25T, ACS 25W, AK20-25, AK25-25	20	28	39	2	5351300	1
AC-25TF, AC-25T	25	28	44	2	5166300	1
AC-32TF, AC-32T	32	42	56.7	2	901447	10
AC-40TF, AC-40T	40	46	62	2	5163000	1
AC-50TF	50	60	78	2	5163100	1

Honeywell

Rotary Valves & Actuators

Electric Rotary Actuators
Rotary Valves

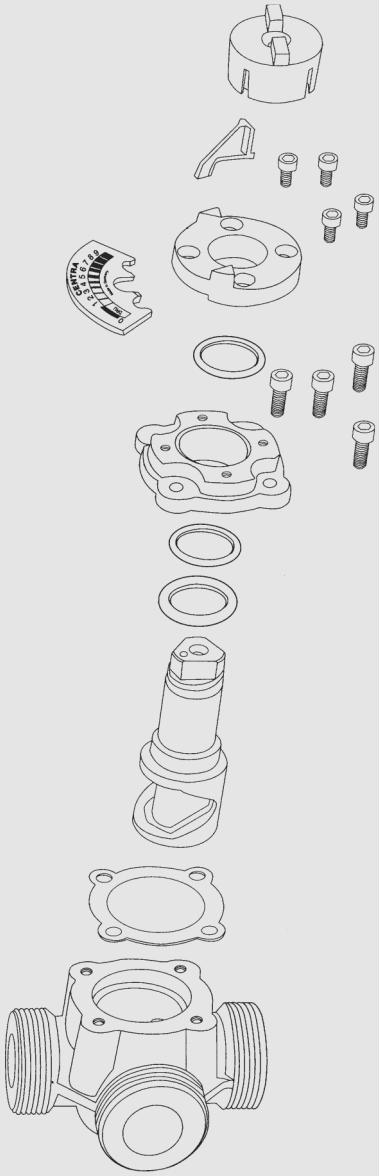

M6061A,L

Electric Rotary Actuator

Spare Parts

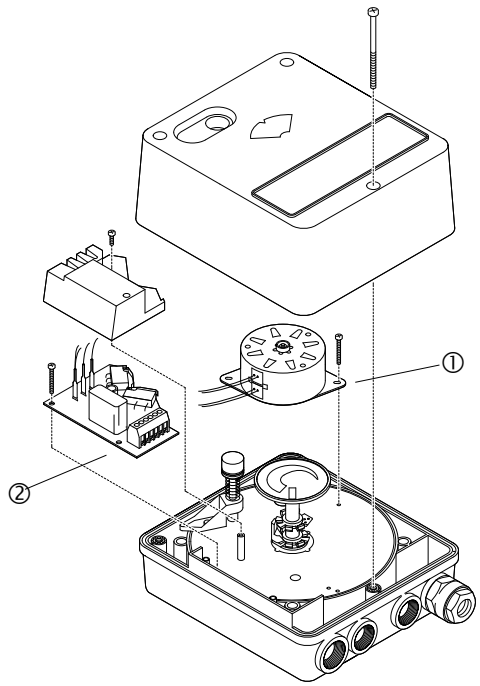

		M6061							
	Honeywell	A1013	A1021	A1039	A1047	L1019	L1027	L1035	L1043
Description	Order-Number								
① Synchronous motor 230 V for M6061L	030000345					•	•	•	
Synchronous motor 24 V for M6061A	030000432	•	•	•					
	030000531				•				
② PCB 230 V for M6061L	030000346					•	•	•	•
PCB 24 V for M6061A	030000433	•	•	•					
	030000498				•				

DR, DRK / ZR, ZRK

Rotary Valve Linkage

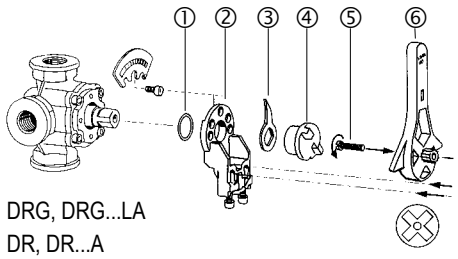

Type: DRG, DRG...LA
DR, DR...A
DR, ZR...A

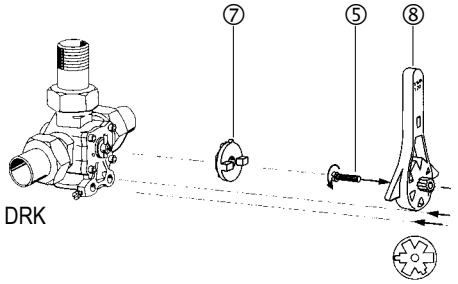

Type: DRK

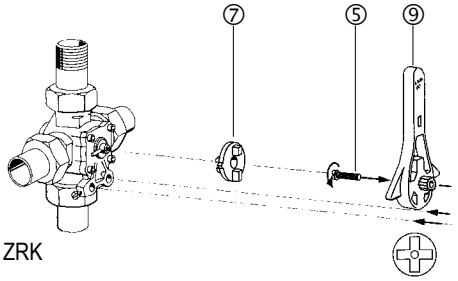

Type: ZRK

Description	Order-Number	
Pointer for valves up to DN 65	030000175	③
Mounting set for Universal 3 or 4 way mixing valves DR, ZR:		
M6061 Mounting Set	ATK2040A	①②③④⑤⑥
Mounting plate	030000302	②
Handle	030000518	⑥
Coupling	030000526	④
Mounting set for compact 3-way mixing valves DRK:		
M606I Mounting set	030000406	⑤⑦⑧
Handle	030000516	⑧
Coupling	030000525	⑦
Mounting set for 4-way compact mixing valves ZRK:		
M606I Mounting set	030000407	⑤⑦⑨
Handle	030000517	⑨
Coupling	030000525	⑦

DR / ZR

3/4-Way Rotary Valves

Spare Parts
(from Datecode 1988)

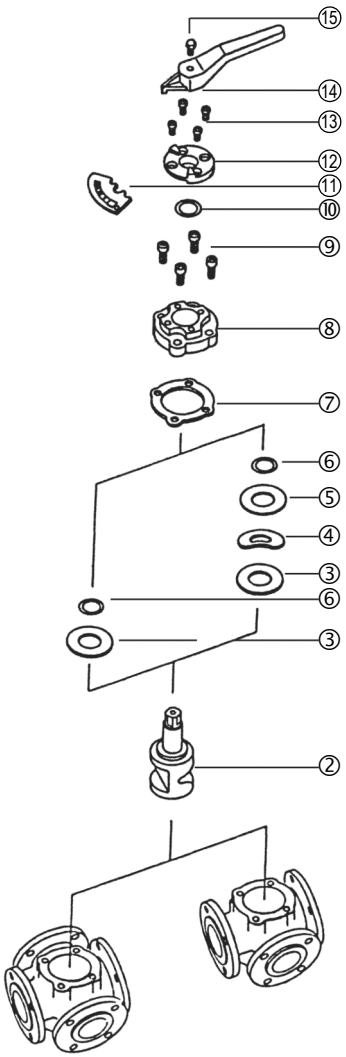

Description	Order-Number	
Complete sealing package including lock and pressure washers		
DN 15-40	019001030	③④⑤⑥⑦⑩
DN 50-65	019001040	
DN 80-100	019001050	
DN 125-200	019001060	③④⑤⑥⑦⑩
O-ring-seal complete with screws	030000114	⑫
O-ring for O-ring-sealing (ca. 25/32 mm)	071099535	⑩
Valve sealing (complete with O-ring seal, O-ring and screws)		③④⑤ ⑥⑦⑧⑨⑩⑫⑬
DN 15-25	030000105	
DN 32-40	030000106	
DN 50-65	030000107	
DN 80-100	030000108	
DN 125-200/I	030000392	
Plug ZR		②
DN 15	030000110	
DN 20	030000110	
DN 25	030000111	
DN 32	030000112	
DN 40	030000113	
DN 50	030000162	
DN 65	030000164	
DN 80	030000165	
DN 100	030000168	
DN 125/I	030000388	
DN 150/I	030000390	
DN 200/I	030000391	
Plug DR...G		②
DN 15 (DR15-2 GMLA)	030000404	
DN 15 (DR15-4 GMLA)	030000099	
DN 20	030000099	
DN 25	030000121	
DN 32/40	030000100	
DN 50	030000101	
DN 65	030000102	
DN 80	030000103	
DN 100	030000104	
DN 125/I	030000387	
DN 150/I	030000389	
DN 200/I	030000496	
Handle kit (complete with screw)		⑭⑮
DN 15-65	030000115	
DN 80-200	030000098	
Scale		⑪
ZR 80-200	030000120	
DR 15-65	030000117	
DR 80-125	030000123	
DRG - L-R 15-65	030000116	

V5433A,G / V5442A,G

3-Way Compact Rotary Valve
PN 6

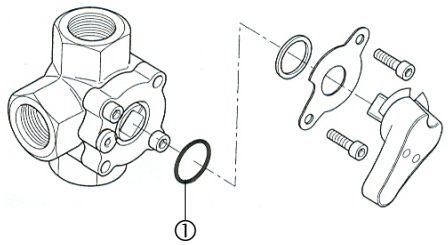

Description	Order-Number	
Seal assembly for V5433A,G DN20...32 V5442A,G DN20...32	071161036	①
Seal assembly for V5433A,G DN40...50	071161037	①

DRU / HE

3-Way Rotary Valve
PN 10

Spare Parts

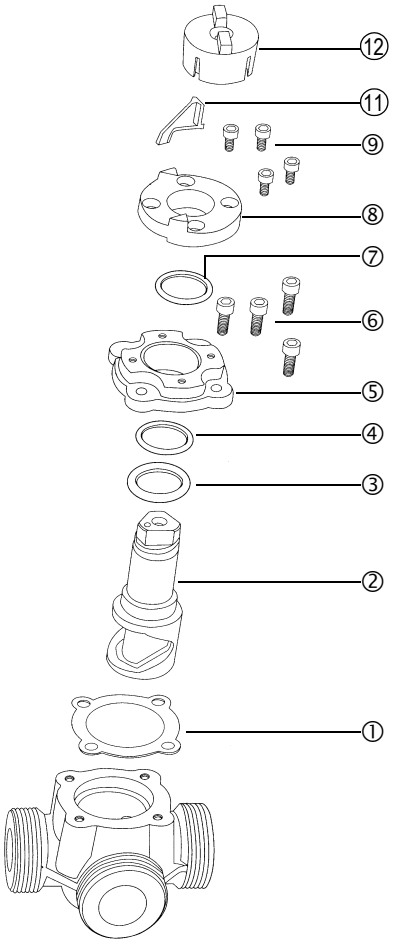

Description	Order-Number	
Plug		②
DRU 25 - 2.5	030000434	
DRU 25 - 4.0	030000435	
DRU 25 -6.3	030000436	
DRU 25 - 10	030000437	
DRU 32 - 10	030000439	
DRU 32 - 16	030000440	
DRU 32 - 25	030000441	
Internal threaded socket with gaskets and cap nut, DRU25, HE25	STU25	
Internal threaded socket with gaskets and cap nut, DRU32, HE32	STU32	
Welding socket with gaskets and cap nut, DN 25	WTU25	
Welding socket with gaskets and cap nut, DN 32	WTU32	
Soldering socket with gaskets and cap nut, DN 25	LSU25-18	
Soldering socket with gaskets and cap nut, DN 25	LSU25-22	
Soldering socket with gaskets and cap nut, DN 25	LSU25-28	
Soldering socket with gaskets and cap nut, DN 32	LSU32-22	
Soldering socket with gaskets and cap nut, DN 32	LSU32-28	
Bonnet package		①③④⑤ ⑥⑦⑧⑨
O-ring seal with O-ring and screws		
DRU 25	030000105	
DRU 32	030000106	
Pointer DRU 25 / 32	030000443	⑪
Sealing package	019001030	①③④⑦⑧
O-ring seal with screws	030000114	⑧⑨
O-ring for ring seal	071099535	⑦
DRU package	030000522	⑧⑪⑫

Honeywell

Wall Modules

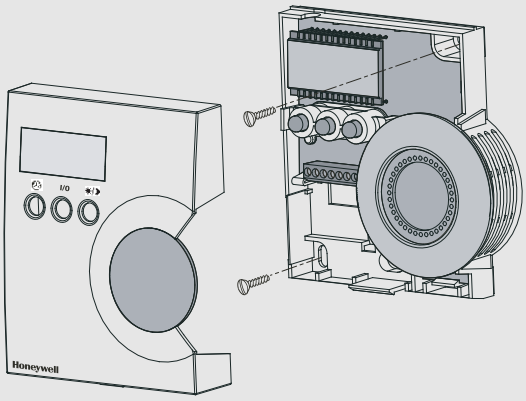

ncludes blue 12/30 white 12/30

Sets for T7460/T7560/T7270/C7110D

Spare Parts

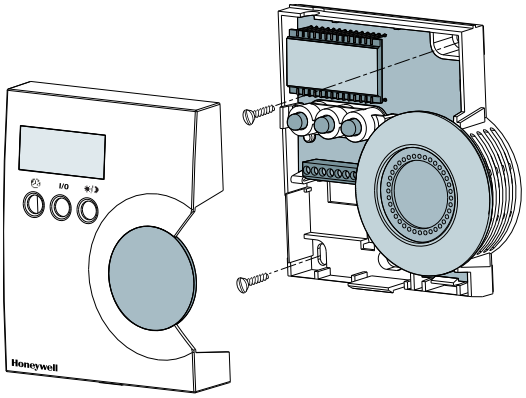

	Honeywell	T7460	T7560	T7270	C7110	
Description	Order-Number					
Round knob, blue	WMSPS-3	•	•	•	•	
Round knob, white	WMSPS-4	•	•	•	•	
Setpoint wheel, unprinted, blue	WMSPS-5		•	•		
Setpoint wheel, unprinted, white	WMSPS-6		•			
Setpoint wheel, printed with ±5K scale, blue T7460B to F	WMSPS-8	•				
Blind cover instead setpoint wheel, blue	WMSPS-1		•	•	•	
Blind cover instead setpoint wheel, white	WMSPS-2	•	•		•	
Setpoint pack Includes following parts: blue 12/30 disc white +-5 & 12/30 disk white round knob	WMSPS-9	•				
Fanspeed knob T7460D,E,F	WMSPS-10	•				
Occupancy pushbutton T7460C,E,F	WMSPS-11	•				
Blind cover for pushbuttons, bulk pack of 50 units for T7270/T7460/T7560	T7560BLINDS		•	•		Ø 7mm

Incl. blue 12/30 white 12/30

Variable-Frequency Drives

Variable-Frequency Drives

NXL HVAC
NXS
SmartDrive HVAC – HVAC400
Spare Parts

Spare parts NXL / NXS

Order Number	Description
NX-FAN-4	Main fan assembly for NXL HVAC/NXS size 4 (HVAC03-HVAC12 & NXS0003-NXS0012)
NX-FAN-5	Main fan assembly for NXL HVAC/NXS size 5 (HVAC16-HVAC31 & NXS0016-NXS0031)
NX-FAN-6	Main fan assembly for NXL HVAC/NXS size 6 (HVAC38-HVAC61 & NXS0038-NXS0061)
NXLPANC	NXL keypad (standard 7-segment)
NXLOPTAI	HVAC I/O spare (3DI, 1 Relay (NO), 1 Thermistor input)

Spare parts NXS

Order Number	Description
NX-FAN-7	Main fan assembly for NXS size 7 (NXS0072-NXS0105)
NXPANA	NXS keypad (alphanumeric)
NXPANG	NXS keypad 2 (special keypad for Chinese & Cyrillic letters)
NXOPTA1	NXS I/O spare for slot A (6DI, 1DO, 2AI, 1AO)
NXOPTA3	NXS I/O spare for slot B (1 relays NO, 1 relays NO/NC, 1 thermistor input)
NXOPTA2	NXS option board for slot B to replace standard board (2 relays NO/NC)
NXOPTA8	NXS option board for slot A to replace standard board (NXOPTA1 with isolated AI/AO)

Spare parts SmartDrive HVAC

Order Number	Description
HVAC-FAN-4	Main fan assembly for SmartDrive HVAC size 4 (HVAC400-1p1…HVAC400-5P5)
HVAC-FAN-5	Main fan assembly for SmartDrive HVAC size 5 (HVAC400-7P5…HVAC400-15P)
HVAC-FAN-6	Main fan assembly for SmartDrive HVAC size 6 (HVAC400-18P…HVAC400-30P)
HVAC-FAN-7	Main fan assembly for SmartDrive HVAC size 7 (HVAC400-37P…HVAC400-55P)
HVAC-FAN-8	Main fan assembly for SmartDrive HVAC size 8 (HVAC400-75P…HVAC400-110P)
HVAC-FAN-9	Main fan assembly for SmartDrive HVAC size 9 (HVAC400-132P…HVAC400-160P)
HVAC-IP54FAN-FR04	Internal IP54 Fan for HVAC VFD FR04
HVAC-IP54FAN-FR05	Internal IP54 Fan for HVAC VFD FR05
HVAC-IP54FAN-FR06	Internal IP54 Fan for HVAC VFD FR06
HVAC-IP54FAN-FR07	Internal IP54 Fan for HVAC VFD FR07
HVAC-IP54FAN-FR08	Internal IP54 Fan for HVAC VFD FR08
HVAC-IP54FAN-FR09	Internal IP54 Fan for HVAC VFD FR09
HVAC-CONTROL	SmartDrive HVAC Spare part kit: Control board module
HVAC-TERM-KIT	SmartDrive HVAC Spare part kit: Control terminals
OPT-BT-MC02-5	SmartDrive HVAC Spare part kit: 5 pcs real time clock batteries

Automation and Control Solutions
Honeywell GmbH
Böblinger Strasse 17
71101 Schönaich
Phone (49) 7031 637 01
Fax (49) 7031 637 740
http://ecc.emea.honeywell.com

EN3B-0298GE51 R0818
August 2018
© 2018 Honeywell International Inc.

Honeywell