Honeywell

VBG6-15, VBG6-20, VBG6-20HF
6-Way Valve for 4-pipe systems

H_2O pH 8...9.5 +2 ... 110°C p_{max} = 16bar VDI2035	VBG6-15	DN15	Kv_{max} 1.25
	VBG6-20	DN20	Kv_{max} 2.8
	VBG6-20HF	DN20	Kv_{max} 4.0

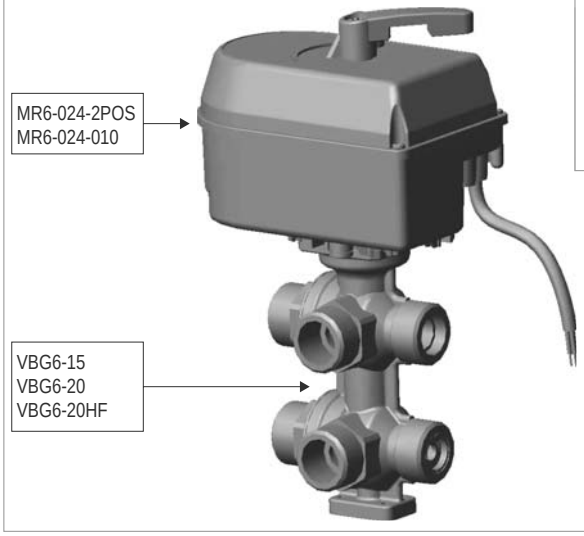

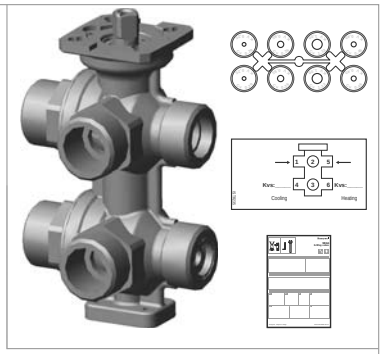

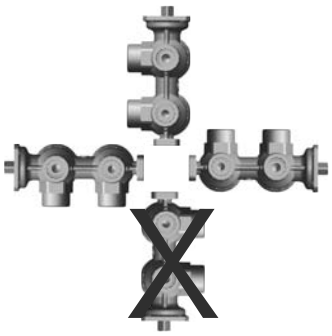

A1



A2

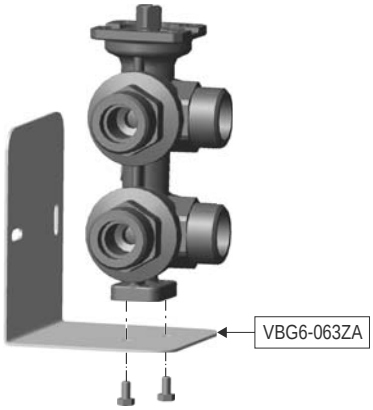

B

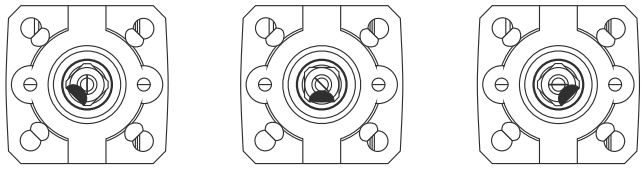

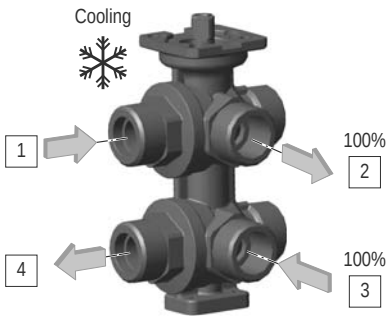

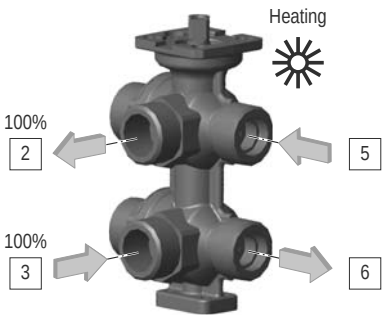

32332976-001

C

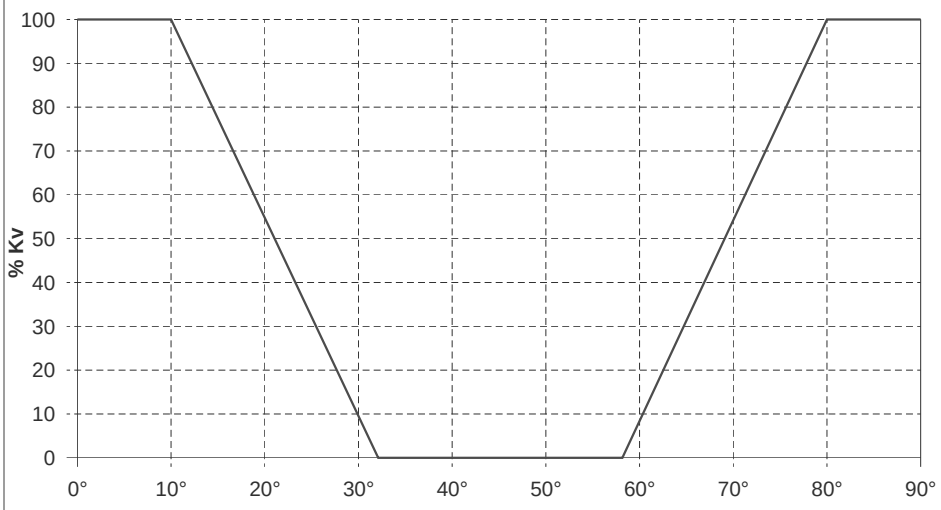

D

DN15 Kv_{max} 1.25	Kv
1	0.25
2	0.40
3	0.63
4	1.00

DN20 Kv_{max} 2.8	Kv
1	0.7
2	1.0
3	1.6
4	2.1

DN20 Kv_{max} 4.0	Kv
1	2.5

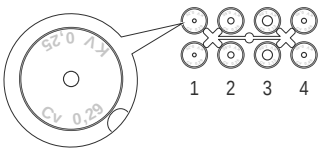

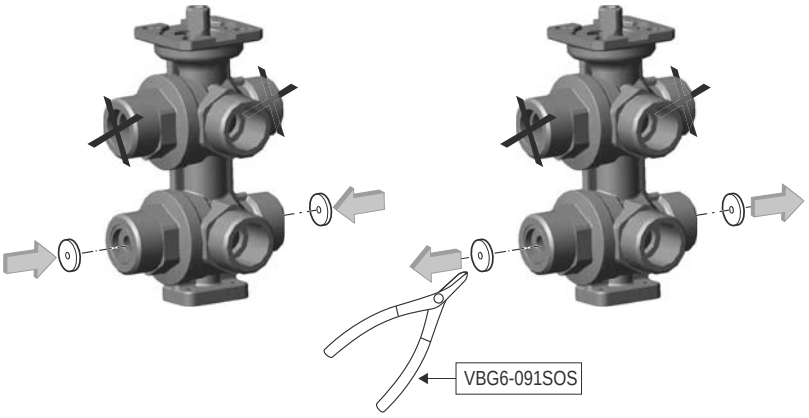

E

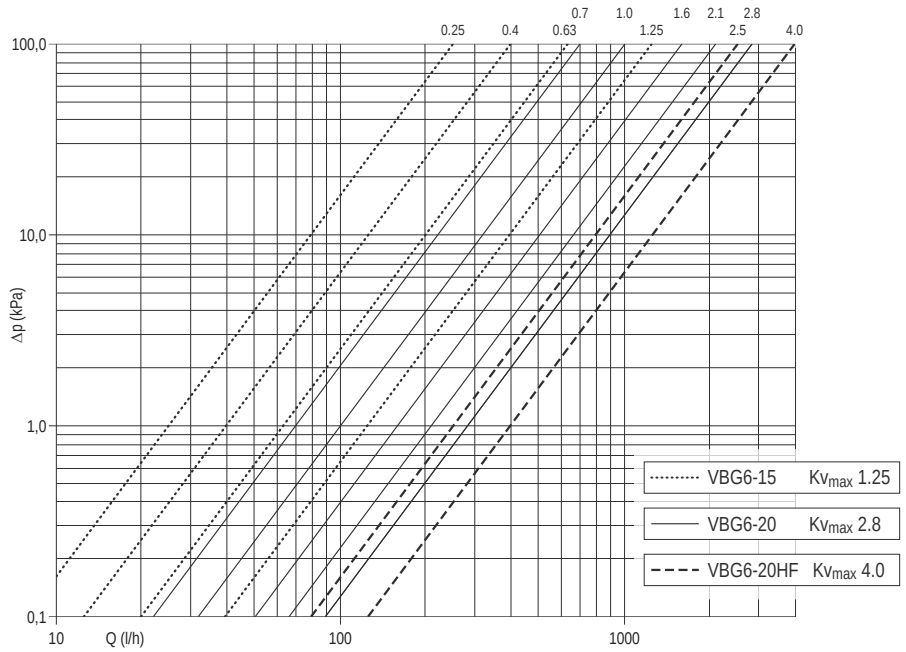

32332976-001

G

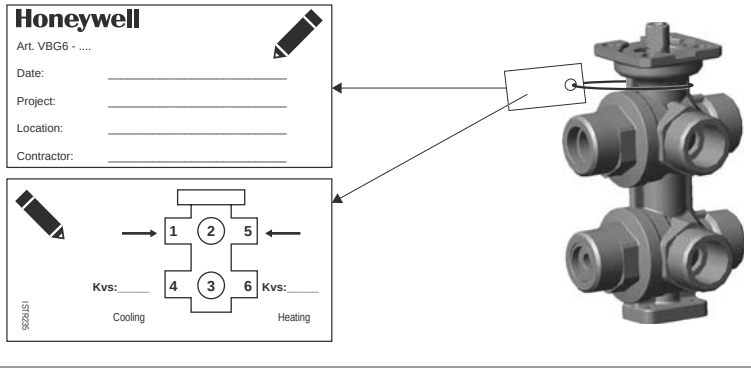

H



DN15: VBG6-036GI-15

DN20: VBG6-036GI-20

Austria
Honeywell Austria Ges.m.b.H.
Handelskai 388
1023 WIEN
AUSTRIA
Phone: (+43) 1 72 78 00
Fax: (+43) 1 72 78 03 08
www.honeywell.at

Belgium
Honeywell SA-NV
Hermes Plaza
Hermeslaan 1H
1831 DIEGEM
BELGIUM
Phone: (+32) 27 28 23 86
Fax: (+32) 27 28 26 97

Bulgaria
Honeywell EOOD
64, Hristofor Columb blvd.
Sofia Airport Center
Logistics building 1
1528 SOFIA
BULGARIA
Phone: (+359) 2 4020900
Fax: (+359) 2 4020990

Czech Republic
Honeywell, spol. s r.o.
V Parku 2326/18
148 00 PRAHA 4
CZECH REPUBLIC
Phone: (+420) 2 42 44 21 11
Fax: (+420) 2 42 44 21 21
www.honeywell.cz

Denmark
Honeywell A/S
Strandvejen 70
2900 HELLERUP
DENMARK
Phone: (+45) 39 55 55 55
Fax: (+45) 39 55 55 51
www.honeywell.dk

Finland
Honeywell Oy
Metsänneidonkuja 12
02130 ESPOO
FINLAND
Phone: (+358) 20 752 2000
Fax: (+358) 20 752 2701
www.honeywell.fi

France
Honeywell SA
72, Chemin de la Noue
74380 CRANVES-SALES
FRANCE
Phone: (+33) 04 50 31 67 30
Fax: (+33) 04 50 31 67 42
www.honeywell-confort.com

Germany
Honeywell GmbH
Vertriebsbüro Haustechnik
Hardhofweg
74821 MOSBACH
GERMANY
Phone: (+49) 18 01 46 63 88
Fax: (+49) 80 00 46 63 88
www.honeywell-haustechnik.de

Greece
Honeywell ECC (Hellas-GR03)
25 Politechniou Str.
14 122, NEO IRAKLIO, ATHENS
GREECE
Phone : +30 210 2848049
Fax: +30 210 2848055
www.honeywell.gr/gr

Hungary
Honeywell Kft.
Petneházy u. 2-4.
1139 BUDAPEST
HUNGARY
Phone: (+36) 14 51 43 00
Fax: (+36) 14 51 43 43

Italy
Honeywell Srl
Via Philips, 12
20900 MONZA
ITALY
Phone: (+39) 039 2165 1
Fax: (+39) 039 2165 288
www.honeywell.it/home

Netherlands
Honeywell B.V.
Laarderhoogtweg 18
1101 EA AMSTERDAM Z.O.
NETHERLANDS
Phone: (+31) 2 05 65 6392
Fax: (+31) 2 05 65 6390
www.regelvisie.nl

Norway
Honeywell A/S
Lierstranda Industriområdet
Terminalen 16
3400 LIER
NORWAY
Phone: (+47) 66 76 20 00
Fax: (+47) 66 76 20 90
www.honeywell.no

Poland
Honeywell Sp. z.o.o.
ul. Domaniewska 39B
02-672 WARSZAWA
POLAND
Phone: (+48) 22 60 60 900
Fax: (+48) 22 60 60 901
www.honeywell.com.pl

Portugal
Honeywell S.A.
Josefa Valcárcel, 24
28027 MADRID
SPAIN
Phone: (+34) 9 13 13 61 00
Fax: (+34) 9 13 13 61 27
www.honeywell.es/home

Romania
Honeywell Romania SRL
Floreasca Business Park
169A, Floreasca Street,
Building A, Sector1
BUCHAREST
ROMANIA
Phone: +4(0) 31 224 3009
Fax: +4(0) 31 710 7121

Russia
Honeywell
Automation and Control Solutions
Honeywell ZAO
Kievskaya 7
121059 MOSCOW
RUSSIA
Phone: +7 (495) 796 9800
Fax: +7 (495) 796 9892

Slovak Republic
Honeywell s.r.o.
Mlynske Nivy 71
PO Box 75
820 07 BRATISLAVA 27
SLOVAKIA
Phone: (+421) 2 32262211
Fax: (+421) 2 32262255

Spain
Honeywell S.A.
Josefa Valcárcel, 24
28027 MADRID
SPAIN
Phone: (+34) 9 13 13 61 00
Fax: (+34) 9 13 13 61 27
www.honeywell.es/home

Sweden
Honeywell AB
Box 10122
121 28 STOCKHOLM-GLOBEN
SWEDEN
Phone: (+46) 87 75 55 00
Fax: (+46) 87 75 56 00
www.honeywell.se

Switzerland
Honeywell AG
Javastrasse 2
8604 VOLKETSWIL
SWITZERLAND
Phone: (+41) 18 55 24 24
Fax: (+41) 18 55 21 45
www.honeywell-schweiz.ch

Turkey
Honeywell Otomasyon Ve Kontrol Ürünleri
Cayiryolu Sok.Ücgen Plaza No: 7, Kat: 7,
ICERENKÖY 81120 ISTANBUL
TURKEY
Phone +90-(0216)-578 71 00
Fax: +90-(0216)-575 66 37
www.honeywell.com.tr

Ukraine
Honeywell Ukraine
10/14, Radishcheva st.
03680 KYIV
UKRAINE
Phone: +38 0 44 351 15 50
Fax: +38 0 44 351 15 51

United Kingdom
Honeywell Control Systems Ltd.
Honeywell House
Skimped Hill Lane
BRACKNELL, BERKS
RG12 1EB
UNITED KINGDOM
Phone: (+44) 13 44 65 62 43
Fax: (+44) 13 44 65 64 54
www.honeywell.com/uk

Middle East Headquarters
Honeywell Middle East Ltd.
EMAAR Business Park
Sheik Zayed Road, Building 2,
Level 2, Office 201
P. O. Box 232362, DUBAI
U.A.E.
Phone: (+971) 4 4505800
Fax: (+971) 4 4505900

Distributors & Africa Headquarters
Honeywell Srl
Via Philips, 12
20900 MONZA
ITALY
Phone: (+39) 039 2165 1
Fax: (+39) 039 2165 288
www.honeywell.it/home

Asia Pacific Headquarters
Honeywell China Co., Ltd.
32F., Tower A, City Center
100 Zun Yi Road
SHANGHAI 200051
CHINA
Phone: (+86) 21 22 19 68 88
Fax: (+86) 21 62 37 07 53

European Headquarters
Honeywell Technologies Sàrl
ZA La Pièce 16
1180 ROLLE
SWITZERLAND
Phone: (+41) 2 17 11 78 00
Fax: (+41) 2 17 11 78 88
http://ecc.emea.honeywell.com

Manufactured for and on behalf of the Environmental and Combustion Controls Division of Honeywell Technologies Sàrl, Z.A. La Pièce 16, 1180 Rolle, Switzerland or its Authorized Representative.
MU2H-2331GE23 R0917 32332976-001
September 2017
© 2017 Honeywell International Inc.
Subject to change without notice • All rights reseved

Honeywell